LOTUS CARS LTD
PARTS AND SERVICE CENTRE

Hethel, Norwich, Norfolk, England, NR14 8EZ. Telephone (0953) 608000
Telex 265871 (Ref. LCA 006 in text). Telefax 605891.

April 1991

ATTENTION SERVICE MANAGER

Service Notes Manual 'Section EMK' (engine management system, non-catalyst Elan S.E.) C100T0327J. Update package 1991/01

Sir/Madam,

Please find enclosed update pages (stamped '1991/01') for the above engine management manual:

Section EMK.1.

Discard	Insert
Pages 13/14, 15/16	Pages 13/14, 15/16 ('1991/01')

Section EMK.3.

Discard	Insert
Page 5/6	Page 5/6 ('1991/01')
Pages 9/10, 11/12, 13/14, 15/16	Pages 9/10, 11/12, 13/14, 15/16 ('1991/01')

Section EMK.4.

Discard	Insert
Pages 9/10, 11/12	Pages 9/10, 11/12 ('1991/01')
Pages 17/18, 19/20, 21/22, 23/24	Pages 17/18, 19/20, 21/22, 23/24 ('1991/01')
Pages 45/46, 47/48	Pages 45/46, 47/48 ('1991/01')
Page 53/54	Page 53/54 ('1991/01')
Page 57	Page 57 ('1991/01')

Section EMK.6.

Discard	Insert
Page 3/4	Page 3/4 ('1991/01')

Please ensure that this update is correctly filed in the appropriate manual, and that extra copies, if required, are ordered immediately using the attached postcard. *Do not forget to check for manuals held in parts stock, and order* updates accordingly. This letter should be filed in the Dealer's working copy for record purposes.

Requests from customers are sometimes received by Lotus, asking to be included on update mailing lists. For logistical reasons this is not possible, but it is most important that dealers ensure that prior to the sale of any manual, all appropriate update packages are included. All Service Notes manuals purchased from Lotus are fully updated at the time of shipment.

Yours faithfully,

Dave Massey

Dave Massey
Senior Technical Author

ENGINE MANAGEMENT & FUEL INJECTION

SECTION EMK - LOTUS ELAN TURBO

	Section
Introduction	EMK.1
Basic Function - Systems & Components	EMK.2
Individual Component Diagnosis & Replacement	EMK.3
Trouble Code Diagnosis Using 'Tech 1' Tool	EMK.4
Trouble Code Diagnosis Without 'Tech 1' Tool	EMK.5
Fault Diagnosis with Intermittent or No Trouble Codes	EMK.6

SECTION EMK.1 - INTRODUCTION

	Sub-Section	Page
EMK Sections Explained	EMK.1. - A	3
General Description of System	EMK.1. - B	4
'Check Engine' Light	EMK.1. - C	8
ALDL Connector	EMK.1. - D	8
Diagnostic Mode (No Scanner Tool)	EMK.1. - E	9
CO Adjustment Mode	EMK.1. - F	10
'Tech 1' Scanner Tool	EMK.1. - G	10
Clearing Trouble Codes	EMK.1. - H	12
ECM Learning Ability	EMK.1. - I	13
Basic Precautions	EMK.1. - J	13
Special Tools	EMK.1. - K	14
Harness Connector Blocks	EMK.1. - L	17
Abbreviations and Glossary of Terms	EMK.1. - M	19

EMK.1 - A EMK SECTIONS EXPLAINED

Introduction - EMK.1

This section starts with a general description of the fuel injection and engine management system to provide an overview of the system and its components.

The operation of the 'Check Engine' light is explained, and how to read trouble codes without a scanner tool. The 'Tech 1' scanner tool is introduced and its operation and advantages explained. Further tools required for full diagnostic/ repair procedures are also listed.

Basic Function - Systems and Components - EMK.2

This section explains the function of each individual component and where it is fitted in order that a thorough understanding of the operation of the system may be gained.

Individual Component Diagnosis and Replacement - EMK.3

This section contains the circuit diagrams, fault finding charts and test procedures necessary to diagnose faults in each component. Replacement procedures and torque figures are also included.

Trouble Code Diagnosis Using 'Tech 1' Tool - EMK.4

'Trouble Codes' are numbers which relate to certain types of fault as detected by the on-vehicle self diagnostic system. The 'Tech 1' tool is an electronic scanner which plugs into the on-vehicle diagnostics and displays trouble codes stored by the electronic control module.

If a 'Tech 1' tool is available, this section should be used to diagnose any problem by following three basic steps.

i) Are the on-vehicle diagnostics working? This is established by performing the "Diagnostic Circuit Check" contained at the front of the section. ALWAYS START HERE.

If the on-vehicle diagnostics are not working, this procedure will refer to another chart in section EMK.4 to correct the problem. If the on-vehicle diagnostics are O.K. the next step is:

ii) Is there a trouble code stored? If a trouble code is stored, refer directly to the trouble code chart of that number in section EMK.4. This will determine if the fault is still present. If no trouble code is stored, the third step is:

iii) 'Scan' serial data. This involves using the 'Tech 1' tool to read the information available from the serial data stream. Information on the 'Tech 1' tool and the meaning of the displays is contained in section EMK.1 - G.

This procedure, which takes only a short time will result in problem diagnosis being made in the most cost effective and reliable manner.

'Trouble Code' Diagnosis Without 'Tech 1' Tool - EMK.5

This section enables fault diagnosis to be made without the use of a scanner tool ('Tech 1').

Fault Diagnosis With Intermittent or No Trouble Codes - EMK.6

If a problem is diagnosed as being 'intermittent' the trouble code charts in section EMK.4 should be used only as a guide, or good components may be needlessly replaced. Section EMK.6 helps to diagnose intermittent problems and driveability problems which do not cause a trouble code to be set.

EMK.1 - B GENERAL DESCRIPTION

The electronic multi-point fuel injection system used on the Lotus Elan is a General Motors fully electronic, processor controlled system, using a separate fuel injector in the intake tract of each cylinder.

The injectors are supplied with fuel at constant pressure (relative to intake manifold pressure) from a common fuel rail, with the quantity of fuel delivered to the engine being controlled by the length of time for which the solenoid operated injectors are opened. The injectors are 'pulsed' in two pairs (1/3 and 2/4) once every engine revolution, with half of the fuel requirement for each cylinder's combustion being supplied by each pulse. The injectors are controlled by a processor called an Electronic Control Module (E.C.M.) which calculates the amount of fuel required by the engine under the operating conditions at any particular time. This information is fed into the E.C.M. by a series of sensors measuring air and coolant temperature, inlet manifold pressure, throttle position and engine and vehicle speed. On the basis of these signals and others, the E.C.M. also controls the ignition timing, turbocharger boost pressure, engine idle speed, and air conditioning compressor clutch.

The Direct Ignition (D.I.) system does away with the conventional distributor and uses two separate ignition coils, a cam angle sensor, an ignition module and Electronic Spark Timing (E.S.T.) control circuitry incorporated into the E.C.M. This type of distributorless ignition system uses a 'waste spark' method of distribution wherein cylinder pairs 1/4 and 2/3 are provided with a spark every revolution, i.e. on both compression stroke and exhaust stroke. At engine cranking speed the ignition module (part of the ignition coil pack) alone controls the spark advance, but at speeds above 800 rpm, the E.C.M. takes over ignition timing control based on inlet manifold air pressure, air temperature, coolant temperature, engine speed and detection of the onset of detonation.

In addition to these functions, the E.C.M. monitors the signals received from the various sensors and compares them with pre-programmed tolerance bands to enable it to recognise 'faults' in the system and light a 'check engine' tell tale lamp on the fascia. This informs the driver that a fault has been detected and furthermore stores in its memory a 'trouble code' for the particular type of fault detected in order that a technician may access the code and be guided to the problem area.

A facility is also provided for the data monitored by the E.C.M. to be tapped via a hand held electronic scanner (known as the 'Tech 1' tool) with an LCD display panel. This tool aids rapid fault diagnosis by displaying all sensor readings and trouble codes.

Key to Schematic Diagram

1. Battery
2. Ignition switch
3. Assembly Line Diagnostic Link (ALDL)
4. Electronic Control Module (ECM)
5. Manifold Air Pressure (MAP) sensor
6. Mass Air Temperature (MAT) sensor
7. Throttle Position Sensor (TPS)
8. Direct Ignition (DI) module and coils
9. Fuel injector (4 off)
10. Idle Air Control (IAC) valve
11. Cam angle sensor
12. Exhaust Gas Recirculation (EGR) valve
13. Coolant Temperature Sensor (CTS)
14. Knock sensor
15. Fuel pump
16. Pulsator
17. Fuel filter

Schematic Diagram

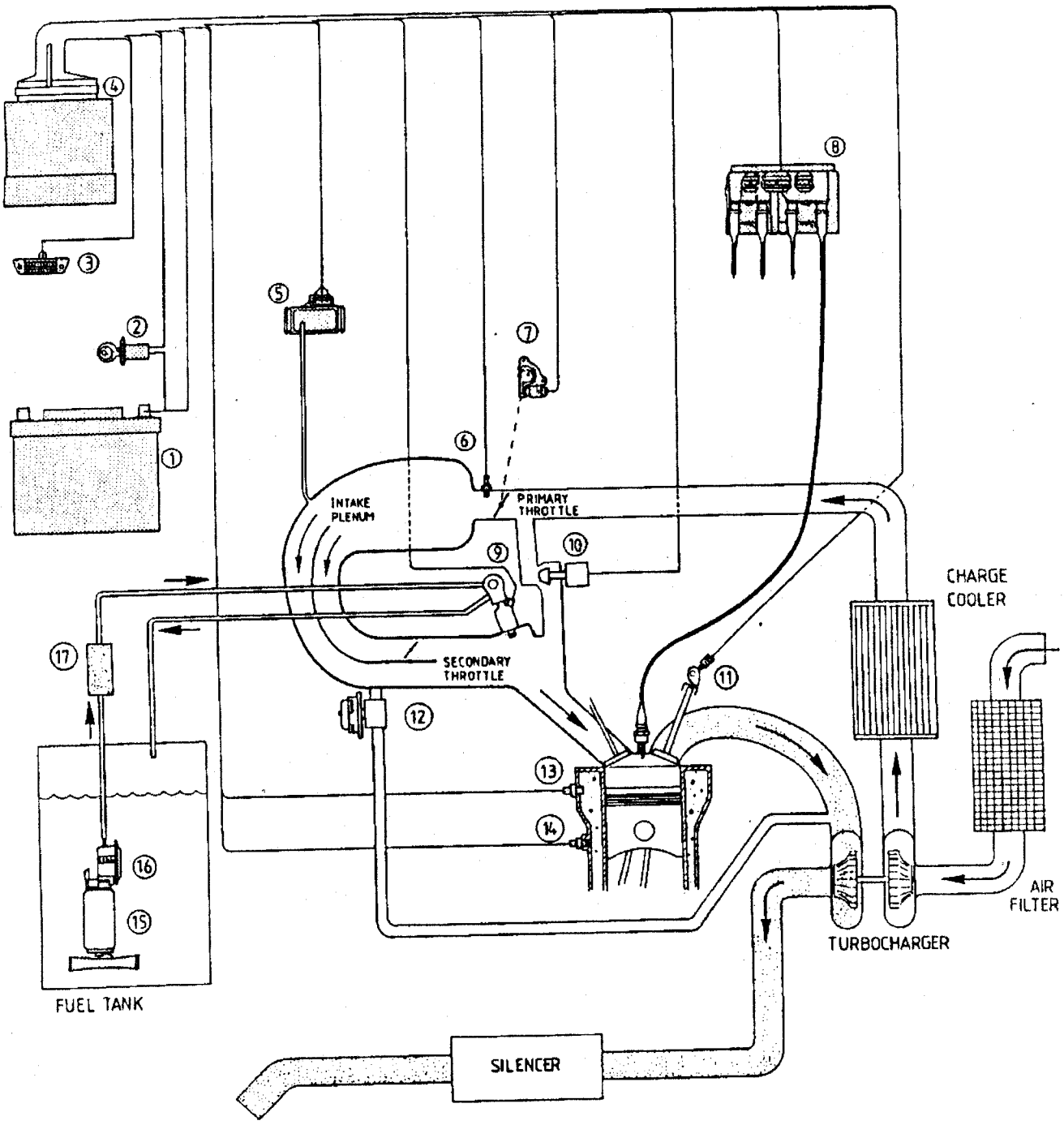

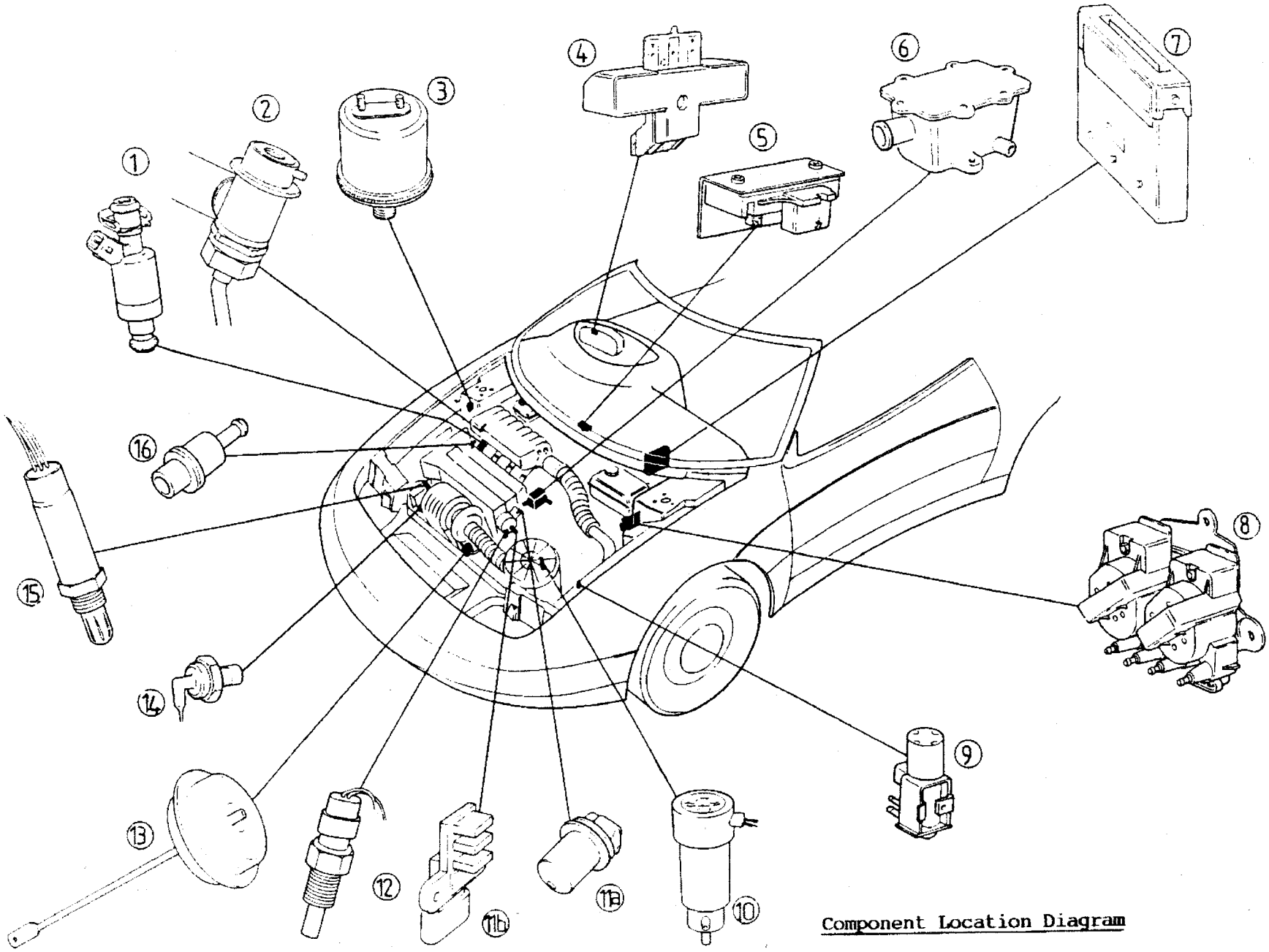

Component Location Diagram

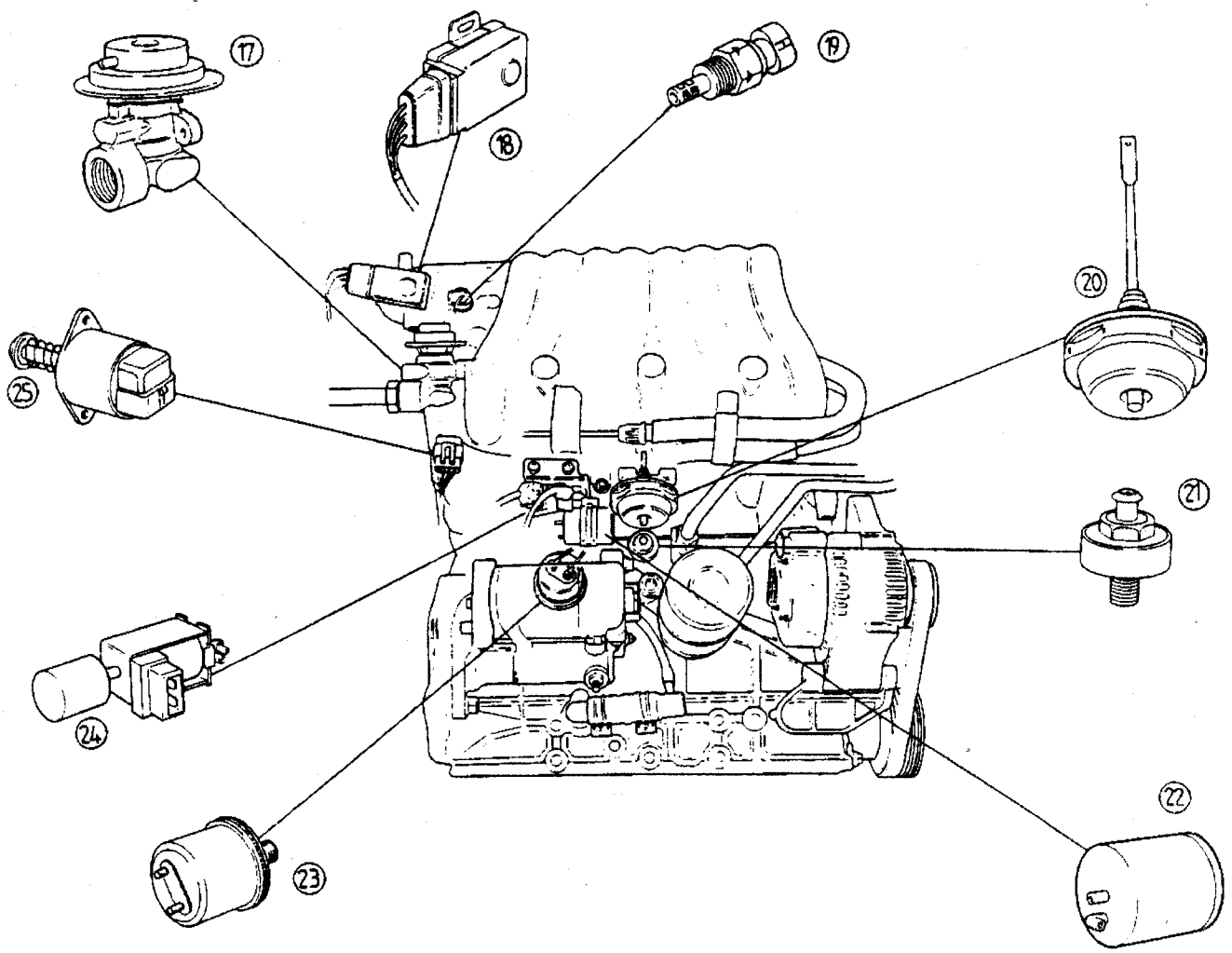

Component Location - Rear Side of Engine

Key to Component Location Diagram

1. Fuel injector
2. Fuel pressure regulator valve
3. Boost gauge transducer
4. Vehicle Speed Sensor (VSS)
5. Manifold Air Pressure (MAP) sensor
6. Crankcase breather oil seperator
7. Electronic Control Module (ECM)
8. Ignition module & H.T. coils
9. Exhaust Gas Recirculation (EGR) vacuum solenoid valve
10. Boost control frequency valve
11. Cam angle sensor:
    11A. Magnetic pick up
    11B. Hall effect sensor
12. Coolant Temperature Sensor (CTS)
13. Wastegate actuator capsule
14. Power Steering Pressure Switch (PSPS)
15. Oxygen (O_2) sensor
16. Positive Crankcase Ventilation (PCV) valve
17. Exhaust Gas Recirculation (EGR) valve
18. Throttle Position Switch (TPS)
19. Manifold Air Temperature (MAT) sensor
20. Secondary throttle vacuum actuator
21. Knock sensor
22. Secondary throttle vacuum reservoir
23. Oil pressure transducer
24. Secondary throttle vacuum solenoid valve
25. Idle Air Control (IAC) valve

EMK.1 - C 'CHECK ENGINE' LIGHT

A 'check engine' tell tale lamp in the instrument binnacle is provided to:

i) To tell the driver that a problem has occurred and that the vehicle should be taken for check/repair as soon as is practicable;
ii) To enable the technician to read out any 'trouble codes' and help diagnose system problems.

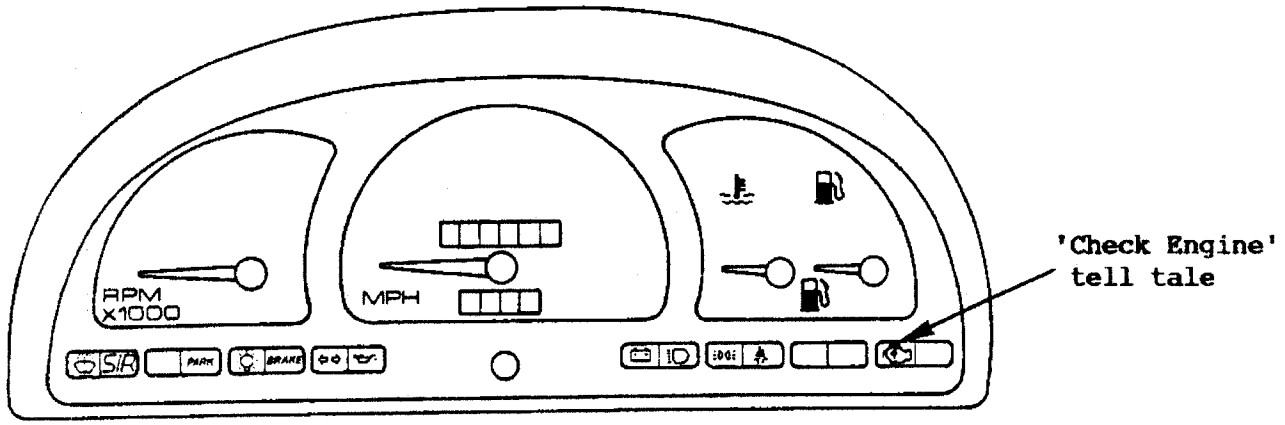

As a bulb and system check, the lamp will light with the ignition on, and should go out when the engine is started. If, however, the lamp remains on, or comes on whilst driving, this indicates that the self diagnostic system has detected a problem and a trouble code has been stored in the memory. If the fault cures itself, or is no longer detected, the lamp will go out in most cases after about 10 seconds, but the trouble code will remain stored in the memory for the next 50 starts to indicate to the technician that an intermittent fault has been detected. If no recurrence is recorded during this period, the stored trouble code will be erased from the memory. Certain types of detected fault result in the ECM imposing a 4,000 rpm limit, to prevent engine damage.

Trouble Codes

Trouble codes may be categorised as either 'intermittent' or 'hard' where an 'intermittent' code is one which was set by a detected fault no longer present, and a 'hard' code is one where the fault still exists. The trouble code charts in sections EMK.4 and EMK.5 are designed to use this discrimination to aid diagnosis.

On the facing page of each trouble code chart are the readings the E.C.M. expects to receive from the relevant sensors. If these readings are outside of the specification, the check engine tell tale will be lit and a trouble code stored in the memory. The trouble code indicates in which CIRCUIT a problem was detected. Such a circuit would include the sensor, the wiring and connectors to it, and the E.C.M.

In order to read any trouble codes stored in the memory, it is necessary to use the Assembly Line Diagnostic Link (ALDL) connector.

EMK.1 - D ASSEMBLY LINE DIAGNOSTIC LINK (ALDL) CONNECTOR

The ALDL electrical connector is plugged into a stowage socket fixed at the front of the passenger footwell:

The ALDL connector is used:

i) at the end of the factory production line to check out the engine management system;
ii) to connect the hand held diagnostic scanner tool ('Tech 1'). Data is read via terminal G;
iii) to read stored trouble codes without a scanner tool.

EMK.1 - E DIAGNOSTIC MODE (no scanner tool)

If the diagnostic terminal (B) of the ALDL connector is grounded (terminal A) using bridging connector T000T0909 with the ignition on and the engine stopped, the system will enter the diagnostic mode, and:

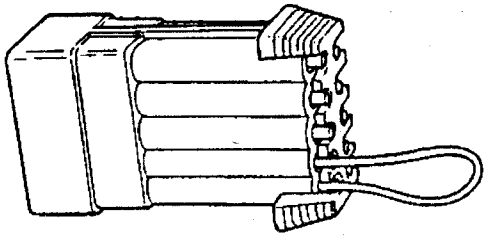

Bridging plug
T000T0909

i) Display a code 12 by flashing the 'Check Engine' tell tale, to indicate that the diagnostic mode is operating. Codes are displayed by the lamp quickly flashing the first digit of the (two digit) number with a short pause before the second digit is similarly flashed.
For example, code 12 would consist of one flash, followed by a short pause then two flashes in quick succession.
If no trouble codes are stored, code 12 will continue to be flashed repeatedly until the diagnostic terminal is ungrounded.

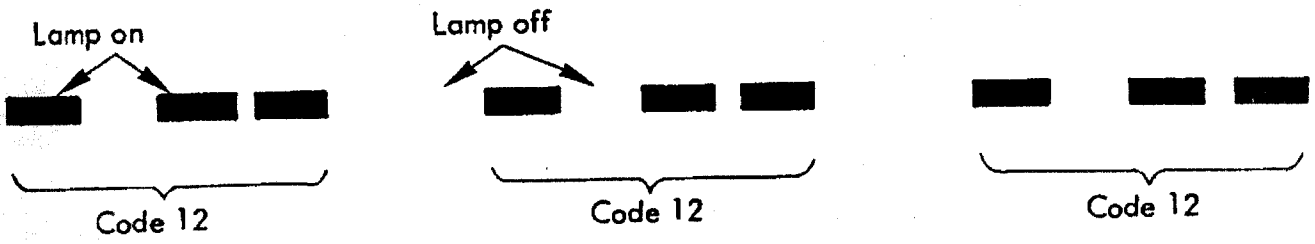

ii) If one or more trouble codes are stored, code 12 will flash 3 times, followed by a short pause before the first trouble code is flashed 3 times in succession, then the next trouble code (if any), until code 12 is again flashed to complete the cycle.
The trouble codes charts in section EMK.5 are used to diagnose the problem and determine if the fault is 'hard' or 'intermittent'.

iii) Energise all ECM controlled relays and solenoids except the fuel pump relay.

iv) Fully extend the idle air control (IAC) valve.

Note that trouble codes can only be displayed with the engine stopped. Grounding the diagnostic terminal with the engine running provides the 'CO adjustment mode' described below.

EMK.1 - F CO ADJUSTMENT MODE

If the diagnostic terminal (B) of the ALDL connector is grounded (use tool T000T0909) with the engine running, the system will enter the CO adjustment mode, and the 'Check Engine' tell tale will light. See section EMK.3 - E for the CO adjustment procedure.

EMK.1 - G 'TECH 1' SCANNER TOOL

The 'Tech 1' is a hand held electronic scanner tool with an LCD display panel which, by plugging into the ALDL connector, is able to display (numerically) any stored trouble codes and allow a quick check of sensors and switches which are inputs to the ECM. Any pair of sensor inputs may be displayed simultaneously either in the workshop, or if necessary whilst driving on the road.

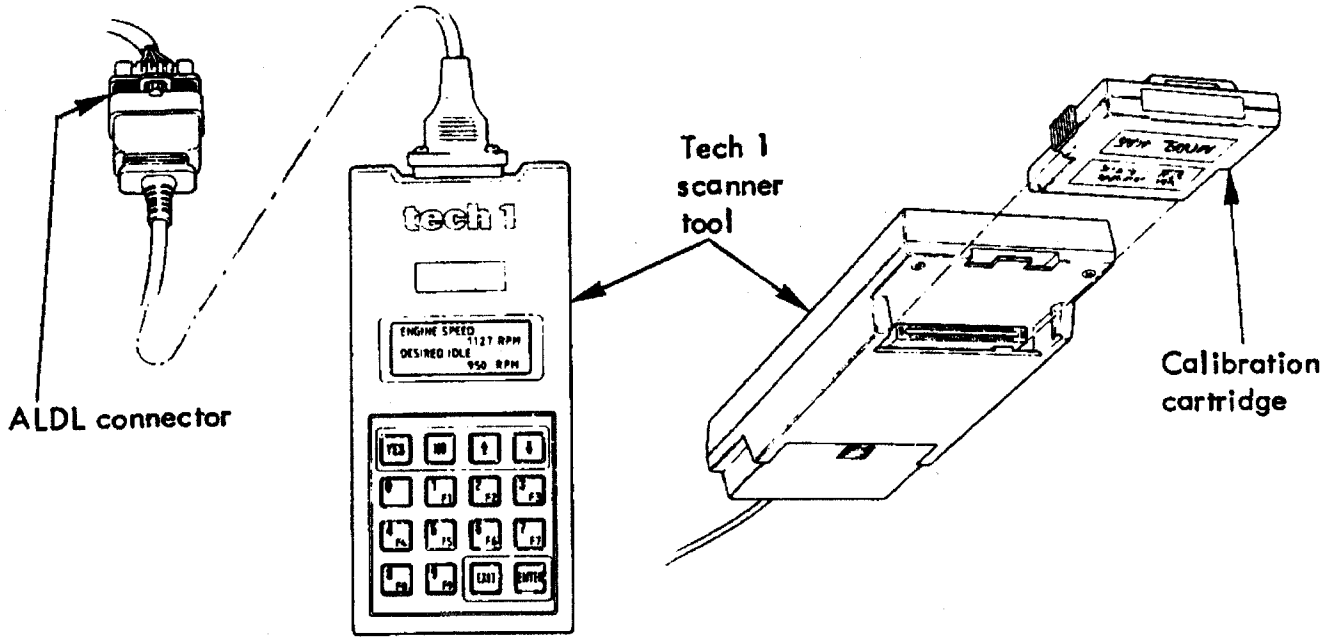

The 'Tech 1' scanner tool does not make the use of diagnostic charts unneccessary. It is used in conjunction with the charts to identify in which circuit a problem is located, and in some cases the tool can provide information that is extremely difficult, or indeed impossible to obtain using other equipment.

'Snapshot' Mode

This facility is extremely useful for diagnosing driveability or intermittent problems which may not set a trouble code.

The tool is plugged in and observed whilst the car is driven, and a continually updated block of data covering the latest time period, from all the sensors is stored in the memory. When the driveability problem is encountered, or the intermittent fault occurs, the 'snapshot' may be triggered manually or automatically, and a further block of sensor data is recorded for a similar time period after the trigger point. Back in the workshop, the readings from each of the sensors may be recalled and assessed before, during and after the trigger point. A variation in sensor reading at the trigger point may indicate a problem area, if necessary comparing readings with a known good vehicle.

Data Displays Available on the Tech 1 Tool

ENGINE SPEED: Displays engine rpm. Often useful if extra reference pulses are suspected. A sudden high rpm indication while at a steady throttle would indicate electrical interference in the reference circuit. This interference is usually caused by ECM wires too close to ignition secondary wires.

DESIRED IDLE: Indicates the rpm to which the ECM is trying to control idle speed

COOLANT TEMP: Displays engine temperature in degrees Centigrade and Fahrenheit. After engine is started the temperature should rise steadily to about 85 - 95°C then stabilise when the thermostat opens.

MASS AIR TEMP: (MAT) Displays temperature of air entering the intake plenum. Should read close to ambient air temperature when the engine is cold, and rise as underhood and engine temperature increases.

MAP: (Manifold Air Pressure) The MAP sensor produces a low signal voltage when inlet manifold pressure is low (high vacuum) and a high voltage when the pressure is high (low vacuum). With the ignition on and the engine stopped, the manifold pressure is equal to atmospheric pressure and the signal voltage will be approximately 2.4 volts.

BARO: (Barometric pressure) Sensed via MAP sensor at instant of ignition switch on. Should read the same, or very close to MAP before engine is started.

IDLE AIR CONTROL: (IAC) This system is used to control engine idle speed to the desired rpm, for different operating conditions. In this mode, the numbers will indicate what position the ECM thinks the valve is in. The ECM moves the IAC in counts and it is the count number which is displayed on the Tech 1 tool.

ENGINE SPEED: Repeated for convenience of use.

THROT POSITION: Displays TPS output in volts.

THROTTLE ANGLE: Displays throttle opening as a percentage.

OXYGEN SENSOR: Not used in this application.

INJ PULSE WIDTH: In this position, the reading is given in milliseconds which is the on time that the ECM is commanding to the injectors.

SPARK ADVANCE: Displays ignition advance in degrees.

MPH KPH: Displays vehicle road speed.

FUEL INTEGRATOR: Not used in this application.

BLOCK LEARN: Not used in this application.

OPEN/CLOSED LOOP: Open loop system used on this model.

BLOCK LEARN CELL: Not used in this application.

KNOCK RETARD: Indicates the number of degrees the ECM is retarding the Electronic Spark Timing.
KNOCK SIGNAL: Displays a "YES" when knock is detected by the ECM and displays a "NO" when knock is not detected.
BATTERY VOLTAGE: Displays the battery voltage detected at the ECM ignition input.
PURGE DUTY CYCLE: Not used in this application.
A/C REQUEST: Displays the state of the A/C signal line to the ECM. Should read "YES" whenever the A/C is requested.
A/C CONTROL: Displays "ON" when the ECM has commanded the A/C clutch "ON".
SYNC PULSES: Should cycle 0,1,2 with engine idling.
PARK/NEUTRAL: Should display "-R-DL". Function not used on manual transmission cars.
POWER STEERING: Display will change from "NORMAL" to "HIGH" when high steering loads are applied.
2ND THROTTLE SOL: Should display "ACTIVE" at low engine speeds, and "INACTIVE" at high speed and with ignition on engine stopped.
AIR CONTROL SOL: Not used in this application.
EGR SOLENOID: Indicates state of EGR solenoid valve.
CO ADJ VOLTS: Displays voltage sensed by ECM on CO potentiometer circuit.
WASTEGATE D.C.: Displays duty cycle of turbocharger wastegate solenoid valve.
PROM ID: This number identifies whether the correct ECM assembly is fitted.
TIME FROM START: Displays time in minutes and seconds since ignition switch on.

EMK.1 - H CLEARING TROUBLE CODES

A trouble code will remain stored in the ECM memory after the fault has been rectified (or does not recur) until the engine is started 50 times, or the code is cleared using the programme provided in the 'Tech 1' tool, or if the battery voltage is disconnected from the ECM for 30 seconds.

CAUTION: To prevent ECM damage, the ignition key must be 'OFF' when disconnecting or reconnecting power to the ECM (e.g. battery cable, ECM pigtail, ECM fuse, jumper cables, etc.).

Trouble codes should be cleared after repairs have been completed. Some diagnostic charts will require codes to be cleared before using the chart in order that the ECM be allowed to set the code during the test and identify the problem more quickly.

Note that when clearing trouble codes with the 'Tech 1' tool, the ignition should first be switched off for 10 seconds.

EMK.1 - I ECM LEARNING ABILITY

The ECM has a 'learning' ability which enables it to make corrections for engine condition in order to maintain the correct idle speed at all times.

If the battery is disconnected, or the power supply to the ECM interrupted, these 'learned' settings will be erased in addition to any stored trouble codes. On reconnection, the ECM will re-learn the idle air control (IAC) valve position after engine start up, and there is unlikely to be any noticable change. However, if the battery is disconnected, or the ECM power supply interrupted before ten seconds have elapsed since turning off the ignition, (or whilst the engine is running), the ECM will not have time to 'park' the IAC valve at a known position, and will lose track of where it is. When first starting the engine after reconnecting the battery or ECM power supply, it may be necessary to partially depress the accelerator pedal, and to release the accelerator very slowly when first returning to idle, to prevent stalling whilst the ECM re-learns the IAC valve position. Alternatively, if after reconnection of the power, the ignition is switched on, and then switched off to 'power down' the ECM, the IAC valve will be parked at a known position, and after ten seconds the engine may be started normally.

When clearing trouble codes the 'Tech 1' tool should always be used so that the trouble code(s) only is cleared, and not any other ECM memories.

EMK.1 - J BASIC PRECAUTIONS

THE LOTUS ELAN TURBO IS CERTIFIED BY THE EMISSIONS AUTHORITIES AS CONFORMING TO THE REQUIREMENTS OF THE REGULATIONS FOR THE CONTROL OF AIR POLLUTION FROM NEW MOTOR VEHICLES. THIS CERTIFICATION IS CONTINGENT ON CERTAIN ADJUSTMENTS BEING SET TO FACTORY STANDARDS. IN MOST CASES, THESE ADJUSTMENT POINTS HAVE BEEN EITHER PERMANENTLY SEALED AND/OR MADE INACCESSIBLE TO PREVENT INDISCRIMINATE OR ROUTINE ADJUSTMENT IN THE FIELD. FOR THIS REASON, THE FACTORY PROCEDURE FOR TEMPORARILY REMOVING PLUGS, CAPS, ETC., FOR THE PURPOSES OF SERVICING THE PRODUCT, MUST BE STRICTLY FOLLOWED AND, WHEREVER PRACTICABLE, RETURNED TO THE ORIGINAL INTENT OF THE DESIGN.

Chocking Drive Wheels

The vehicle drive wheels should always be securely chocked whenever performing system diagnoses with the engine running.

Visual/Physical Inspection

Before embarking on any other diagnostic procedures, it is most important to carry out a thorough and comprehensive visual and physical check of all vacuum pipes/hoses and wires for correct routing, and any signs of pinches, cuts, chafes, poor connections, etc. Do not overlook the more inaccessible areas.

Fuel System

All parts of the fuel feed line between the tank and fuel pressure regulator valve remain under pressure even after switching off the ignition. It is most important that before releasing any fuel connection or component, the fuel pressure relief procedure and safety precautions detailed in EMK.3 - I are followed.

Ignition System

Be aware that the ignition coil output to the spark plugs is in the region of 50 kV, which if received as a 'shock', could in rare circumstances cause medical distress to persons with a weak heart.

'Tech 1' Diagnostic Scanner Kit T000T0896

Plugs into ALDL connector and displays stored trouble codes and sensor readings.

Kit includes scanner, cartridge, lead, self-test adaptor, operator's manual and carrying case.

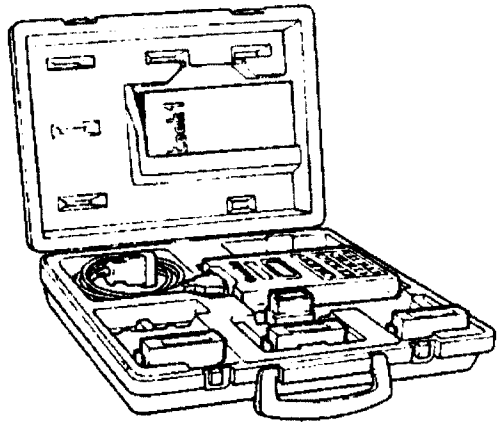

Connector Lead, 'Tech 1' Scanner T000T0897/2

Included in 'Tech 1' kit T000T0896
Connects Tech 1 to ALDL socket.
Use only /2 version (may have TA00053 or gold spot on ALDL end connector).
Resistance between terminals F & G:
/1 version = 0.56 ohm (approx)
/2 version = infinite

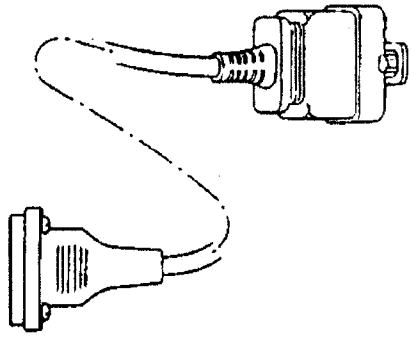

Calibration Cartridge, 'Tech 1' Scanner T000T0898/3

Included in 'Tech 1' kit T000T0896.
Plugs into Tech 1 scanner.
Contains data for Elan and Esprit models.
Identified by "LOTUS 89-90 ECM 'PLUS'".

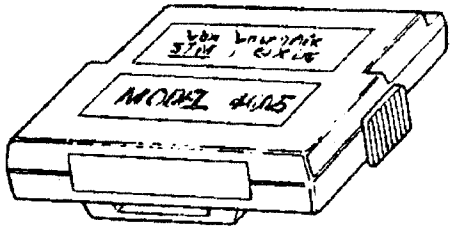

Fuel Pressure and Injector Diagnostic Kit T000T0899

Used to diagnose fuel system problems.
Kit includes; fuel pressure gauge, to check pump delivery pressure and compare individual injector pressure drop; injector test light, to check electrical circuit to an injector; injector tester, to energise an individual injector for a precise time period.
(Replacement seal for gauge A082L6202F)

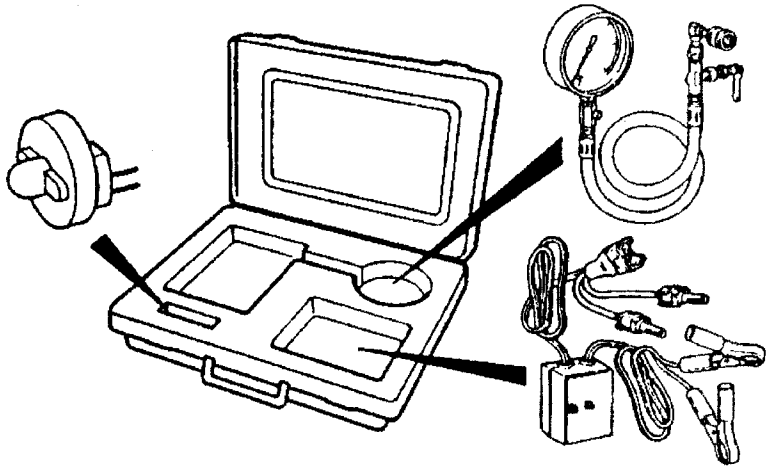

Fuel Pressure Test Hose T000T1083

Fitted between fuel feed line and fuel rail inlet pipe to provide a take-off point for the fuel pressure test gauge, and a means of restricting fuel flow to test fuel pump performance.

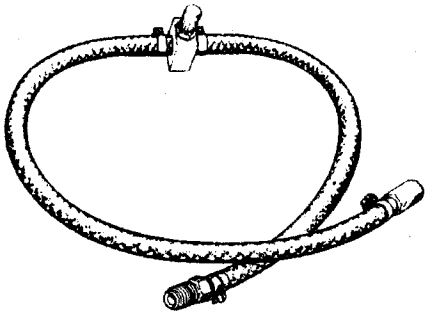

Injector Test Light T000T0900

Included in kit T000T0899. Used to check electrical circuit to an injector.

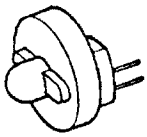

Spark Tester T000T0901

Used to check available secondary ignition voltage.

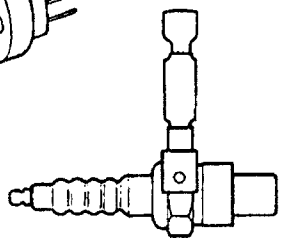

Connector Test Adaptor Kit T000T0902

Used to make electrical test connections in Weather Pack, Metri-Pack and Micro-Pack connector blocks.

Metri-Pack Terminal Remover T000T0903

Used to remove terminals from connector blocks.

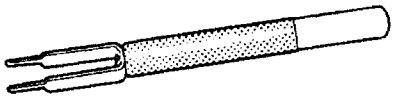

Weather-Pack Terminal Remover T000T0904

Used to remove terminals from connector blocks

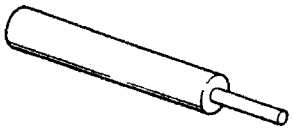

ECM Connector Terminal Remover T000T0905

Used to remove terminals from ECM connector.

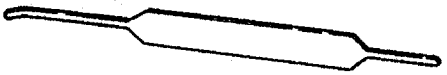

Vacuum Pump T000T0907

Used to operate and diagnose faults in vacuum operated components.

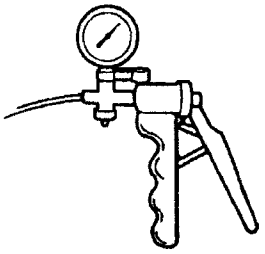

'Speedfit' Connector Release Tool T000T0989

Used to release fuel feed and return pipes from their tank spigots.

ALDL Bridging Connector T000T0909

Used to bridge ALDL connector terminals B and A to enter diagnostic mode without 'Tech 1'.

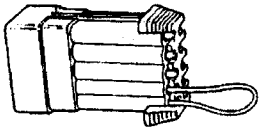

EMK.1 - L HARNESS CONNECTOR BLOCKS

Because of the very low voltage and current levels used in the electronic engine management system, most connectors in the engine compartment are protected against moisture and dirt which could create oxidation and deposits on the terminal.

Take care when probing connector blocks or replacing terminals, to avoid shorting between adjacent terminals, since this can result, in some circumstances, in damage being caused to the electronic components. Always use jumper wires between connectors for circuit checking. Never probe through the Weather-Pack seals.

When diagnosing, open circuits are often difficult to locate by sight because oxidation or terminal misalignment are hidden by the connectors. Merely wiggling a connector on a sensor or in the wiring harness may correct the open circuit condition. This should always be considered when an open circuit or failed sensor is indicated. Intermittent problems may also be caused by oxidised or loose connections.

Before making a connector repair, be certain of the type of connector. Weather-Pack and Compact Three connectors look similar but are serviced differently.

Weather-Pack Connector

The diagram shows a Weather-Pack type connector and the tool T000T0904 required for removing the pin and sleeve terminals. If removal of a terminal is attempted using any other tool, it is likely that the terminal will be bent or deformed. These terminals cannot be straightened once bent.

Ensure that the connectors are properly seated and all of the sealing rings in place when connecting leads. The hinge type flap provides a backup, or secondary locking feature for the connector. They are used to improve the connector reliability by retaining the terminals if the small terminal lock tangs are not positioned properly.

Weather-Pack connections cannot be replaced with standard connections. Instructions are provided with Weather-Pack connector and terminal packages.

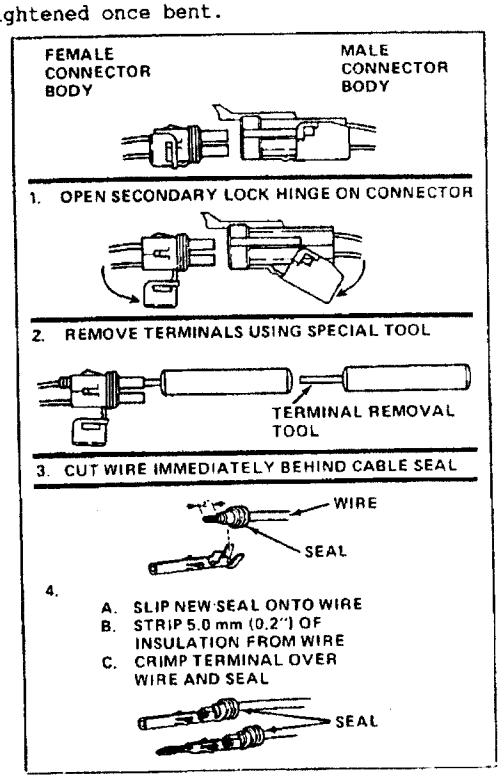

Compact Three Connectors

The Compact Three connector which looks similar to a Weather-Pack connector is not sealed and is used where resistance to the environment is not required.

Use standard methods when repairing a terminal. Do not use the Weather-Pack terminal tool T000T0904.

Metri-Pack Series 150 Connectors

Some connectors used to connect various sensors to the ECM harness use terminals called "Metri-Pack".

They are also called "Pull-to-seat" terminals because, to install a terminal on a wire the wire is first inserted through the seal (5) and connector (4). The terminal is then crimped on the wire and the teminal pulled back into the connector to seat it in place.

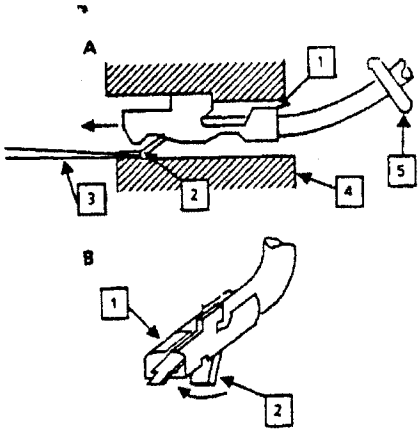

1. Metri-Pack series 150 female terminal
2. Locking tang
3. Tool T000T0903
4. Connector body
5. Seal

To remove a terminal:

1. Slide the seal back on the wire,
2. Insert tool (3) T000T0903 or equivalent, as shown in insert "A" and "B" to release the terminal locking tab (2).
3. Push the wire and terminal out through the connector. If re-using the terminal, reshape the locking tang (2).

Micro-Pack Connectors

The diagram shows a Micro-Pack connector used on the harness to ECM connection. Terminal replaceament requires the use of tool T000T0905 in the manner shown.

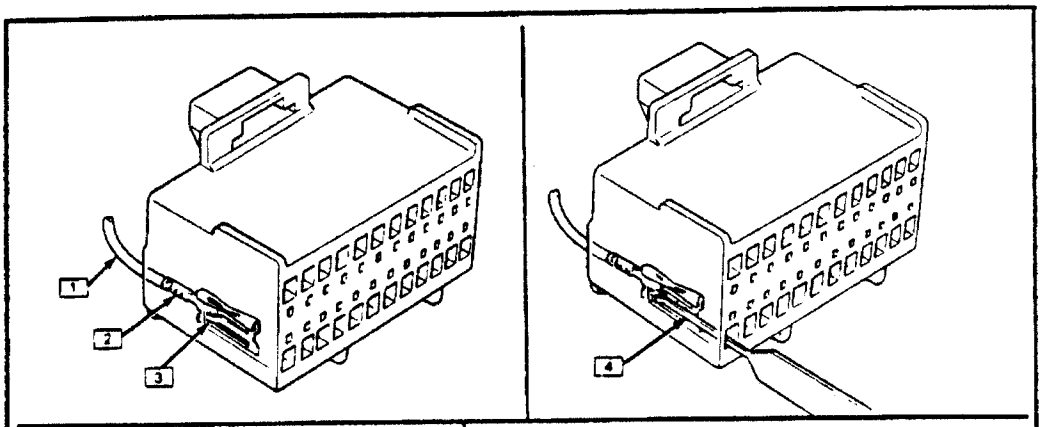

1 CABLE
2 TERMINAL
3 LOCKING TANG
4 TOOL T000T0905

1. GRASP CABLE AND PUSH TERMINAL TO THE MOST FORWARD POSITION.
2. INSERT TOOL T000T0905 STRAIGHT INTO THE FRONT OF THE CONNECTOR CAVITY. DO NOT USE CONVENTIONAL PICK TO REMOVE TERMINAL.
3. WITH TOOL IN PLACE, GENTLY PULL ON THE CABLE TO REMOVE TERMINAL.
4. VISUALLY CHECK TERMINAL AND REPLACE IF TERMINAL CAVITY OR TANG IS DAMAGED.
5. INSTALL TERMINAL INTO CONNECTOR CAVITY UNTIL LOCKING TANG HAS SNAPPED INTO POSITION.

EMK.1 - M ABBREVIATIONS AND GLOSSARY OF TERMS

A/F	Air/Fuel ratio.
ALDL	Assembly Line Diagnostic Link. Connector block located in passenger footwell. Used for verification of management system at the factory and for connection of 'Tech 1' diagnostic scanner tool.
Batt +ve	Battery positive terminal (12 volts).
Cal-Pak	Calibration Package incorporated into Mem-Cal. Allows fuel delivery in the event of a PROM or ECM malfunction.
CEL	Check Engine Light. Tell tale lamp on fascia. Warns driver fault has been detected and can flash fault codes when diagnostic terminal of ALDL connector is grounded.
CKT	Circuit.
CO	Carbon Monoxide.
CTS	Coolant Temperature Sensor.
Diagnostic Terminal	Lead of ALDL connector which is grounded to display stored trouble codes.
DI	Direct Ignition. Uses no distributor.
DVM (10meg)	Digital Voltmeter with 10 million ohm resistance.
ECM	Electronic Control Module. Computer controlling injection and engine management.
EGR	Exhaust Gas Recirculation
ESC	Electronic Spark Control. Retards ignition timing when detonation is detected.
EST	Electronic Spark Timing. ECM control of ignition timing.
HC	Hydrocarbons. Exhaust pollutant.
High Impedance Voltmeter	Used on circuits with very low current flow, as meter does not affect current in circuit under test.
Hg	Mercury. A calibration material used to measure vacuum.
IAC	Idle Air Control valve. Controls airflow past throttle plates to control idle speed.
MAP	Manifold Absolute Pressure.
MAT	Mass Air Temperature. Sensor in intake plenum.

Mem-Cal	Memory Calibrator. Cartridge fitted into ECM. Contains calibrations specific to a particular model variant.
MFI	Multiport Fuel Injection. System using individual injectors for each cylinder.
Mode	A particular state of operation.
NC	Normally Closed. State of relay contacts of solenoid plunger when no voltage is applied.
NO	Normally Open. State of relay contacts or solenoid plunger when no voltage is applied
NOx	Nitrogen Oxides. Exhaust gas pollutant.
Open Loop	ECM fuel control without use of oxygen sensor.
PCV	Positive Crankcase Ventilation. System prevents crankcase fumes passing directly into atmosphere.
PROM	Programmable Read Only Memory. Contained within Mem-Cal.
PSPS	Power Steering Pressure Switch.
TPS	Throttle Position Sensor.
VSS	Vehicle Speed Sensor.
Wastegate	Device used to control proportion of exhaust gas fed into turbocharger. Limits boost pressure.
WOT	Wide Open Throttle.

Circuit Diagram Cable Colour Code

B	Black	O	Orange	U	Blue
G	Green	P	Purple	W	White
K	Pink	R	Red	Y	Yellow
LG	Light Green	S	Slate		
N	Brown	T	Tan		

SECTION EMK.2

BASIC FUNCTION - SYSTEMS & COMPONENTS

	Sub-Section	Page
Electronic Control Module (ECM)	EMK.2 - A	2
- Engine Coolant Temperature Sensor	EMK.2 - B	3
- Mass Air Temperature (MAT) Sensor	EMK.2 - C	4
- Manifold Absolute Pressure (MAP) Sensor	EMK.2 - D	5
- Throttle Position Sensor (TPS)	EMK.2 - E	5
- Air Conditioning Control	EMK.2 - F	6
- Vehicle Speed Sensor (VSS)	EMK.2 - G	6
- Power Steering Pressure Switch (PSPS)	EMK.2 - H	6
- CO Potentiometer	EMK.2 - I	7
Fuel Control System	EMK.2 - J	7
- Fuel Pump	EMK.2 - K	9
- Fuel Rail & Pressure Regulator	EMK.2 - L	9
- Fuel Injectors	EMK.2 - M	11
- Intake System	EMK.2 - N	11
- Idle Air Control (IAC) Valve	EMK.2 - O	12
Direct Ignition (DI)	EMK.2 - P	13
- Cam Angle Sensor	EMK.2 - Q	14
- Ignition Module & HT Coils	EMK.2 - R	14
- Electronic Spark Timing (EST)	EMK.2 - S	15
- Electronic Spark Control (ESC)	EMK.2 - T	15
Positive Crankcase Ventilation (PCV)	EMK.2 - U	16
Exhaust Gas Recirculation (EGR)	EMK.2 - V	17
Turbo Boost Control	EMK.2 - W	18

EMK.2 - A ELECTRONIC CONTROL MODULE (ECM)

The Electronic Control Module (ECM) is a microprocessor controlling the fuel injection and engine management system. It constantly monitors data received from various sensors and controls engine operation to provide optimum performance and driveability consistent with the minimum of harmful emissions. The ECM controls most output circuits by switching the ground circuit through Quad Driver Modules (QDMs). A QDM is a group of electronic switches which can independently control up to four outputs.

The different parameters sensed and the systems controlled are as follows:-

PARAMETERS SENSED	SYSTEMS CONTROLLED: Fuel Delivery	Idle Speed	Spark Timing	EGR Control	Secondary Throttles	Wastegate Control	Air Conditioning	Check Engine
Engine Speed	X	X	X	X	X	X		X
Vehicle Speed	X	X	X	X			X	X
Coolant Temp.	X	X	X	X	X	X	X	X
Mass Air Temp.			X	X				X
Manifold Pressure	X	X	X	X	X	X		X
Barometric Pressure	X	X				X		
Throttle Position	X	X	X	X		X	X	X
Battery Voltage	X	X				X		
Engine Detonation			X			X		X
Time	X	X	X	X		X	X	
A/C Request		X					X	
CO Potentiometer	X							X
Power Steer Switch		X					X	
Diag/ALDL Mode	X	X	X					X
Camshaft Position	X		X					X

The ECM consists of two principal parts:-

i) Controller. This is the main body of the ECM and includes the basic control circuits.

ii) Mem-Cal. This is a "Memory and Calibration" cartridge which plugs into the controller. It contains data specific to particular vehicles together with the functions of the PROM; programmable read only memory, Cal-Pak; calibration package designed to allow fuel delivery in the event of malfunction in the controller or PROM, as a 'get you home' facility, and ESC; electronic spark control module.

On the Elan, the ECM is a non-servicable sealed unit, which must not be opened. Warranty is invalidated if the anti-tamper seal is broken.

The ECM is mounted:

i) on LHD cars in the driver's footwell, outboard of the pedal box on the front bulkhead;

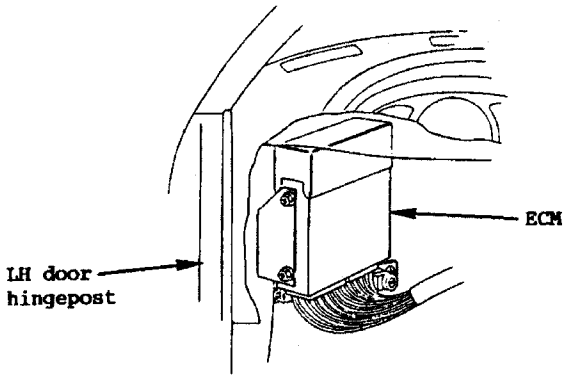

ii) on RHD heater cars, hanging from a scuttle beam bracket behind the glovebox;

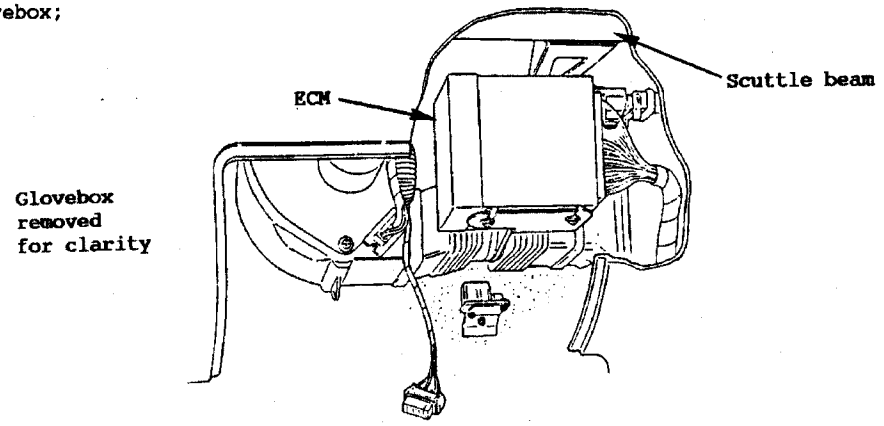

iii) on RHD a.c. cars, below the blower fan housing in the passenger footwell.

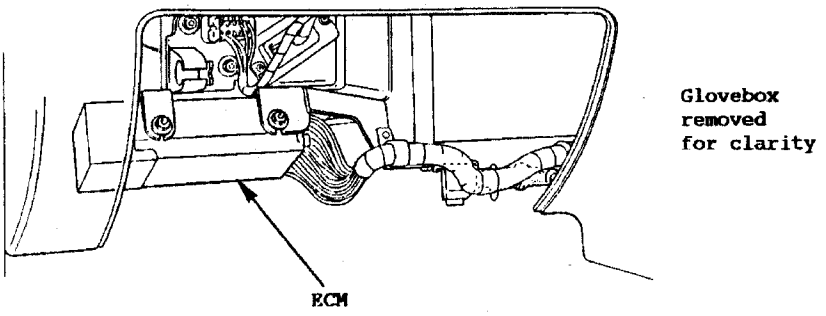

ALDL Connector Plug

The ECM can recognise operational problems and alert the driver via a 'Check Engine' tell tale lamp on the fascia, whilst storing a 'trouble code' to help the technician make rapid fault diagnosis. An 'Assembly Line Diagnostic Link' (ALDL) connector plug is provided for use both at the end of the assembly line to check for correct system operation, and in service, for diagnostic purposes. A special hand held electronic scanner tool ('Tech 1') plugs into this connector and enables all the sensor readings to be displayed, together with any stored trouble codes. See Section EMK.1 for a full explanation of using the diagnostic facility.

The ALDL connector is stowed in a dummy socket which is located:

i) on LHD a.c. cars, on a bracket fixed to the base of the evaporator unit at the front of the passenger footwell.

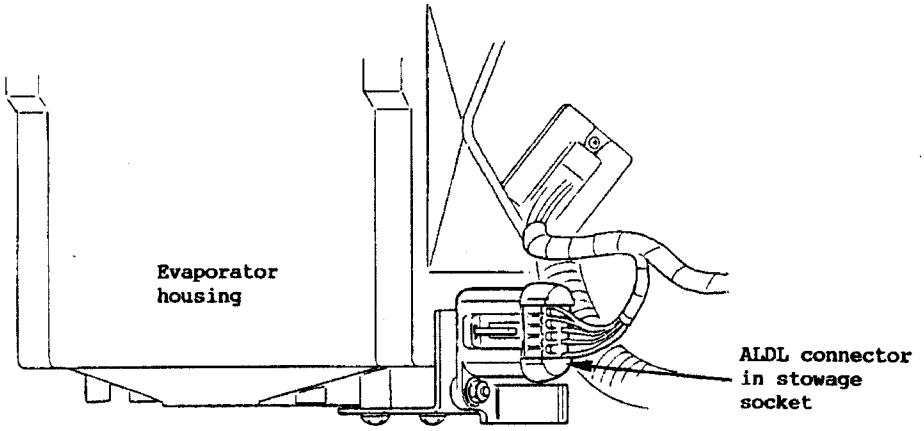

ii) on RHD a.c. cars, above the ECM on the rear of the blower fan housing. For access, slacken the glovebox stop bracket to allow the glovebox to swing down fully.

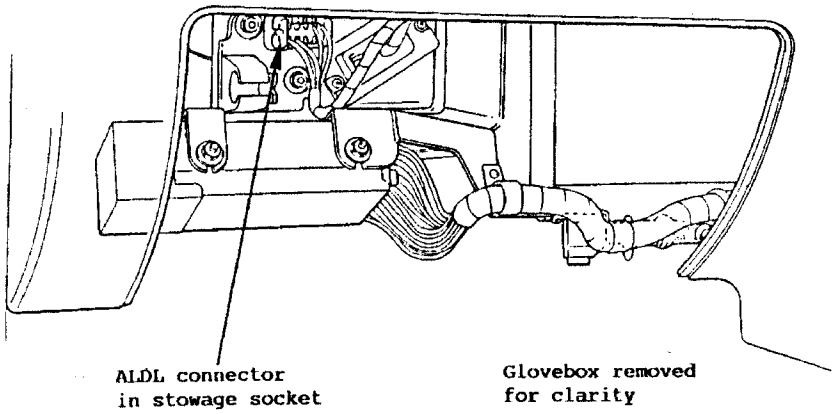

iii) on RHD and LHD heater cars, on a bracket fixed to the bulkhead at the front of the passenger footwell.

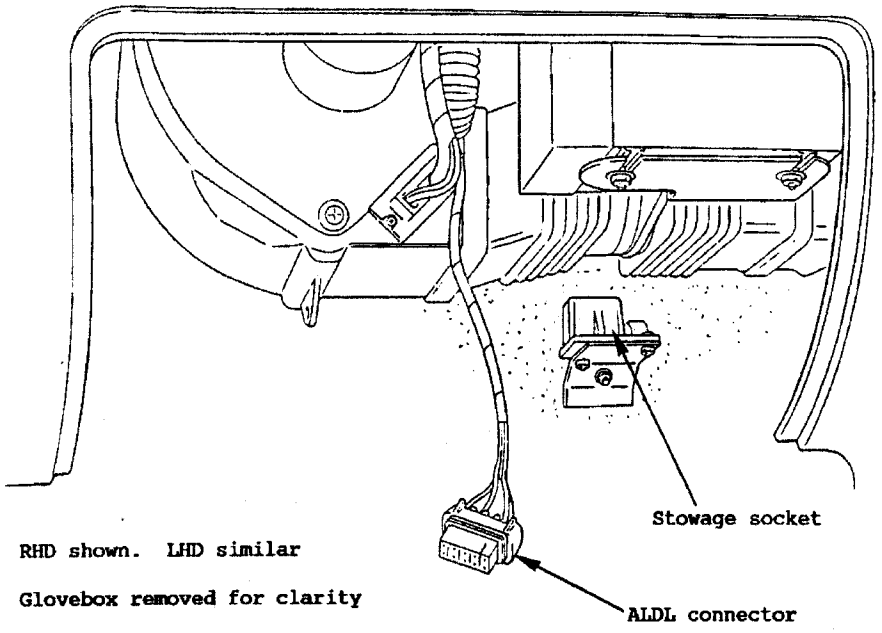

Use of a Voltmeter in Diagnostic Procedures

The ECM powers various sensors and switches with either 5 or 12 volts derived via resistances in the ECM which are so high in value that a test light will not fuction when connected to the circuit. In some cases even conventional voltmeters will not give an accurate reading because the meter resistance is too low, and the current used by the meter itself is significant enough to affect the characteristics of the circuit being measured. It is therefore essential to use a 10 megohm input impedance digital voltmeter to ensure accurate voltage readings are obtained.

EMK.2 - B ENGINE COOLANT TEMPERATURE SENSOR

The ECM requires a coolant temperature input signal in order to increase fuel delivery and maintain driveability during the cold running and warm-up phase. The signal from this sensor is used for many different parameters within the engine management system to control and switch various components dependent on engine temperature.

The sensor is a thermistor (a resistor which changes value with temperature) mounted in the thermostat housing (LH end face of cylinder head). Low coolant temperature produces a high resistance (100,000 ohms at minus 40°C) while high temperature causes low resistance (70 ohms at 130°C).

The ECM supplies a 5 volt signal to the coolant temperature sensor through a resistor in the ECM and monitors the terminal voltage. Since this forms a series circuit to ground through the coolant sensor, high sensor resistance (low temperature) will result in high ECM terminal voltage. When the coolant sensor's resistance is low (high temperature), the terminal voltage will be drawn lower. This terminal voltage indicates engine coolant temperature to the ECM.

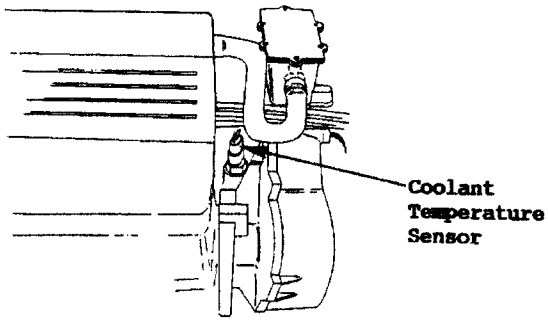

EMK.2 - C MASS AIR TEMPERATURE (MAT) SENSOR

The **Mass Air Temperature (MAT) sensor** is fitted into the inlet of the intake plenum chamber. The ECM uses the signal from this sensor in conjunction with others to calculate air density and the appropriate fuel delivery for both starting and running.

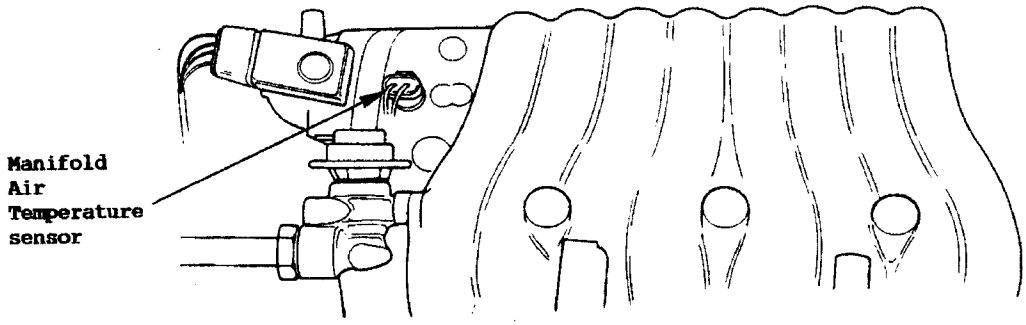

The mass air temperature sensor is a thermistor (a resistor which changes value with temperature) similar to the coolant temperature sensor. Low temperature produces a high resistance (100,000 ohms at minus 40°C) while high temperature causes low resistance (185 ohms at 100°C). The ECM supplies a 5 volt reference signal to the MAT sensor, and by measuring the sensor output voltage is able to calculate the sensor resistance, and thereby the plenum air temperature.

Low air temperature produces a high sensor resistance for a higher fuel requirement.

EMK.2 - D MANIFOLD ABSOLUTE PRESSURE (MAP) SENSOR

The MAP sensor is mounted at the centre top of the front bulkhead and is connected by hose to the right hand end of the intake plenum chamber. The ECM uses an inlet manifold pressure signal to help interpret engine operating conditions and fuel requirements. The MAP sensor is also used to provide a barometric pressure signal to the ECM at the instant of ignition switch on and off. This allows the ECM to automatically adjust fuel delivery to compensate for the variation in pressure that occurs at different altitudes.

Note that manifold absolute pressure is the OPPOSITE of manifold vacuum. For example, a closed throttle on engine overrun would produce a low manifold absolute pressure (high vacuum) signal. The ECM sends a 5 volt reference signal to the MAP sensor, and by measuring the sensor output voltage is able to calculate manifold pressure.

High manifold pressure produces a high sensor resistance for a higher fuel requirement. If the MAP sensor fails, the ECM will substitute a value and use the throttle position sensor and other sensors to control fuel delivery.

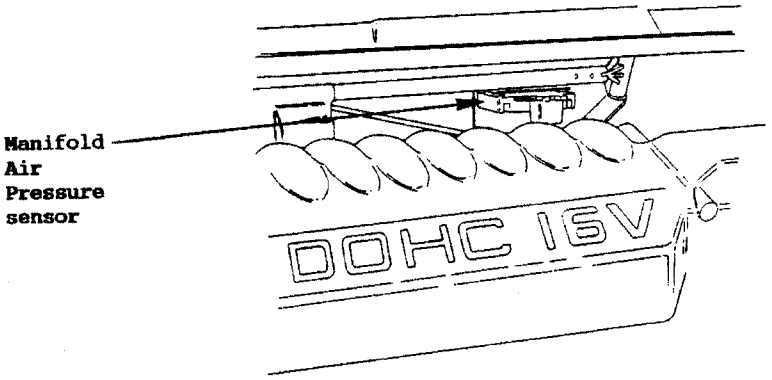

EMK.2 - E THROTTLE POSITION SENSOR (TPS)

The throttle position sensor is a potentiometer fitted to the end of the primary throttle spindle on the intake plenum chamber. The ECM supplies 5 volts to the sensor and by montoring the voltage on a returning signal line, the ECM is able to determine throttle position and calculate the fuel requirement.

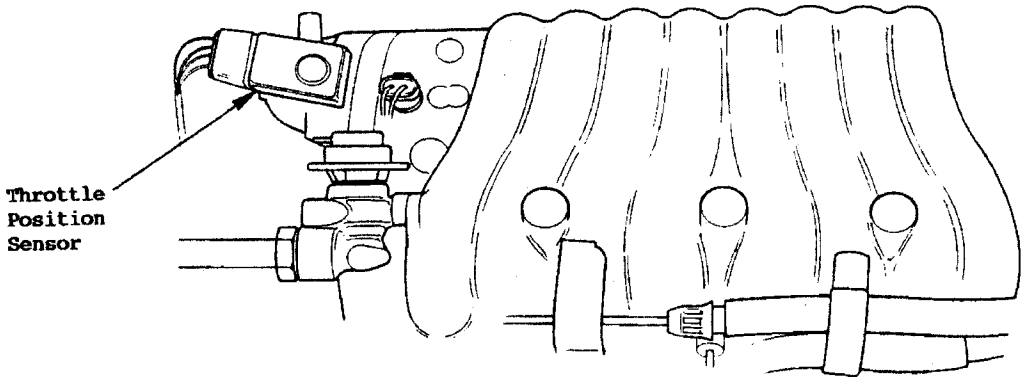

With the throttle closed, the TPS output is low (typically 0.5 volt), but increases as the throttle is opened until at wide open throttle, output voltage is typically 4.0 volts. This signal is used by the ECM for fuel control and for many of the ECM controlled outputs. If a fault is detected and a trouble code set, the ECM will substitute an artificial default value for the TPS signal to enable the vehicle to 'limp home'. This mode may result in a high idle speed.

EMK.2 - F AIR CONDITIONING CONTROL

When the air conditioning is switched on, the ECM receives the signal from the a/c switch unit requesting operation of the compressor. Before energising the a/c compressor, the ECM first amends the idle speed setting via the idle air control valve to compensate for the extra loading on the engine. The radiator fans (2 off) are energised to cool the condenser whenever the compressor is operating.

Some engine operating conditions will override the a/c request signal and switch off the air conditioning. These include: wide open throttle to make available full engine power; high vehicle speed to increase engine cooling system margins; abnormally high engine coolant temperature to help prevent overheating.

EMK.2 - G VEHICLE SPEED SENSOR (VSS)

Vehicle speed information is supplied to the ECM by the vehicle speed sensor which is an optical pulse generator incorporated into the back of the speedometer head. The generator produces a square wave DC output whenever the vehicle speed is over about 2 km/h (1 mph) and which increases in frequency with increasing vehicle speed.

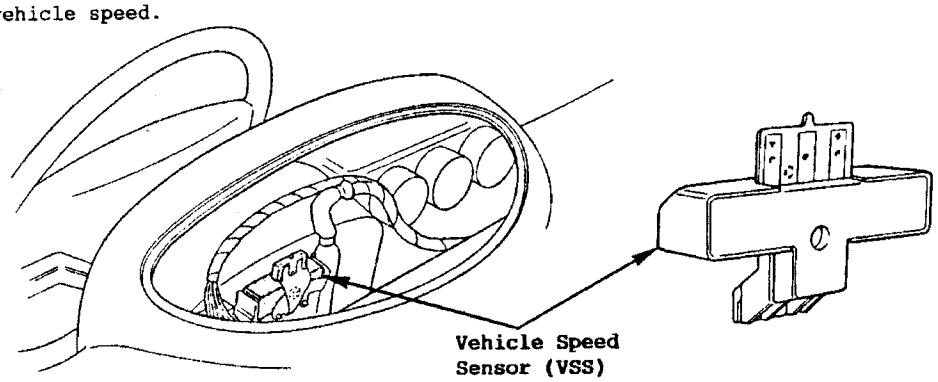

This information is used by the ECM in its control of the air conditioning, idle air control valve and exhaust gas recirculation.

EMK.2 - H POWER STEERING PRESSURE SWITCH (PSPS)

This switch is fitted into the power steering pump and detects when the pump is under heavy load (e.g. parking manoeuvre). The ECM uses this signal to amend the IAC valve position to compensate for the increased engine loading and prevent stalls.

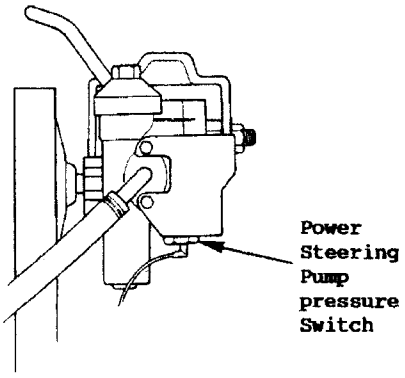

Front view of power steering pump

EMK.2 - I CO POTENTIOMETER

The CO potentiometer is a variable resistor, the adjustmemt of which controls the base setting of the air/ fuel ratio. This setting is made when the engine is idling at normal running temperature, to achieve a specified tailpipe CO level.

The potentiometer is located ahead of the glovebox, and is adjusted as detailed in section EMK.3 - E.

Right Hand Drive Heater

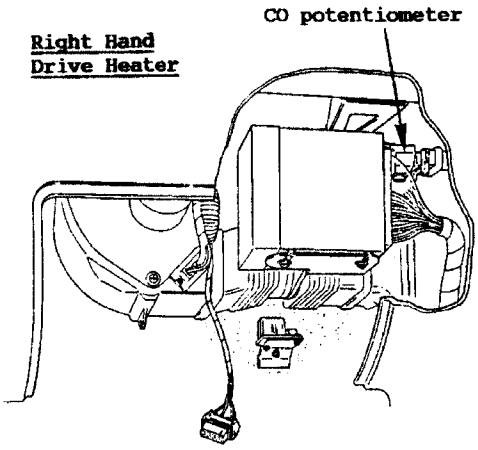

Left Hand Drive

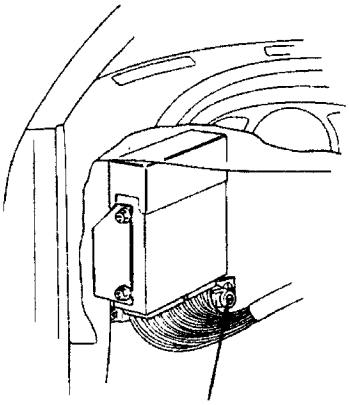

Right Hand Drive A.C.

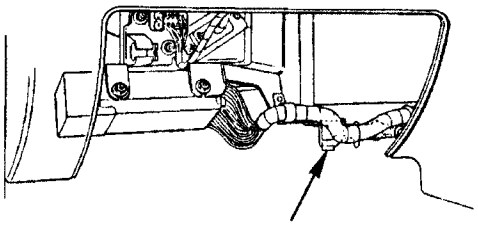

EMK.2 - J FUEL CONTROL SYSTEM

Fuel is stored in a single fuel tank ahead of the left hand rear wheel arch. A submerged electric pump within the tank pumps fuel through an in line filter located adjacent to the tank, to a fuel rail with pressure regulator. The amount of fuel supplied to the fuel rail is over and above that required by the injectors at maximum demand, with the pressure regulator returning the extra fuel back into the tank.

The fuel rail connects with the four solenoid injectors fitted in the lower inlet manifold. The ECM pulses the injectors in pairs (1 with 3 and 2 with 4) normally once every engine revolution, with half of the fuel necessary for each cylinder's combustion being delivered by each injector pulse.

Modes of Operation

The ECM uses voltage inputs from several sensors to determine how much fuel to deliver to the engine. The fuel may be delivered in any one of several different 'modes' with the ECM controlling which mode is appropriate according to the readings it receives from the sensors at that particular time.

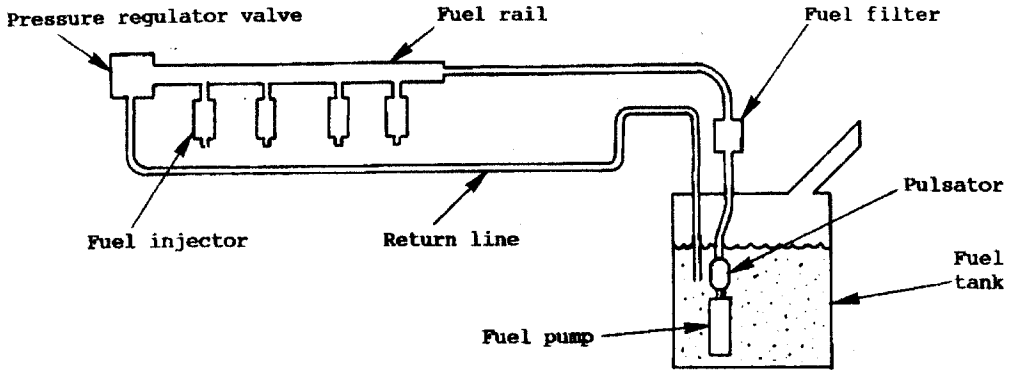

Starting Mode

When the ignition is first turned on, the ECM turns on the fuel pump relay for two seconds to pressurise the system ready for starting. The ECM also checks the coolant temperature sensor and throttle position sensor readings and determines the appropriate air/fuel ratio for starting. This ranges from approximately 0.8:1 at minus 40°C to 16.8:1 at 104°C engine coolant temperature.

The ECM controls the quantity of fuel delivered by changing the injector 'pulse width' i.e. length of time the injector is energised and opened.

Clear Flood Mode

Provision is made for clearing a flooded engine as follows:

If the throttle is held fully open and the engine cranked, the ECM will set a lean air/fuel ratio for as long as engine speed is below approximately 600 rpm. If throttle opening becomes less than 70% the ECM returns to the starting mode.

Run Mode

Above 600 rpm, the ECM switches to 'run mode', with the amount of fuel supplied dependent on signals received by various sensors.

Acceleration Mode

The ECM responds to rapid changes in throttle position and manifold absolute pressure and provides extra fuel.

Deceleration Mode

The ECM responds to changes in throttle position and manifold pressure and reduces the amount of fuel. When deceleration is very rapid, the ECM can cut off fuel completely for short periods.

Battery Voltage Correction Mode

If the ECM senses a battery voltage low enough to affect the correct operation of ignition and fuel systems, compensating amendments are made to various functions to permit near normal operation, until normal voltage is again sensed.

Fuel Cut-Off Mode

In order to prevent dieseling when the engine is switched off, the ECM turns off the injectors together with the ignition. Also, no fuel is delivered unless reference pulses are received by the ignition module, which means that the engine is either cranking or running. This prevents flooding of a stalled engine. To safeguard the engine from damage, the ECM will shut off the injectors if the MAP sensor detects excessive boost pressure caused by a control system failure, or if an engine speed of 7,200 rpm is exceeded.

EMK.2 - K FUEL PUMP

The fuel pump is a roller vane type, high pressure electric pump mounted submerged within the fuel tank. The pump supplies fuel at a pressure of 211 - 379 kPa (30.5 - 55 psi) dependent on operating conditions, through an in line filter located adjacent to the tank (accessible via a removeable panel in the hood stowage compartment) to the fuel rail assembly. A fuel strainer is attached to the fuel pump inlet line and prevents dirt particles from entering the fuel line and tends to separate water from the fuel. A pulsator is fitted above the fuel pump and is connected to its outlet line to reduce pressure pulsations in the supply line. The whole assembly of pump, strainer and pulsator is fixed by the supply and return pipes, to a mounting plate secured by cam ring to the top face of the tank.

The pump is able to deliver 4 - 5 times the engine's maximum requirement, so that fuel is constantly circulated through the in-line fuel filter, fuel rail, and via the fuel pressure regulator, back to the tank. This fuel circulation helps avoid excessive fuel temperature with the consequent risk of vapour locks.

When the ignition is switched on, the ECM energises the fuel pump which will continue to run for as long as the ECM receives ignition pulses from the ignition module (engine cranking or running). If no ignition pulses are received, the ECM switches off the pump either 2 seconds (approximately) after the ignition was switched on, or about 10 seconds after a stall.

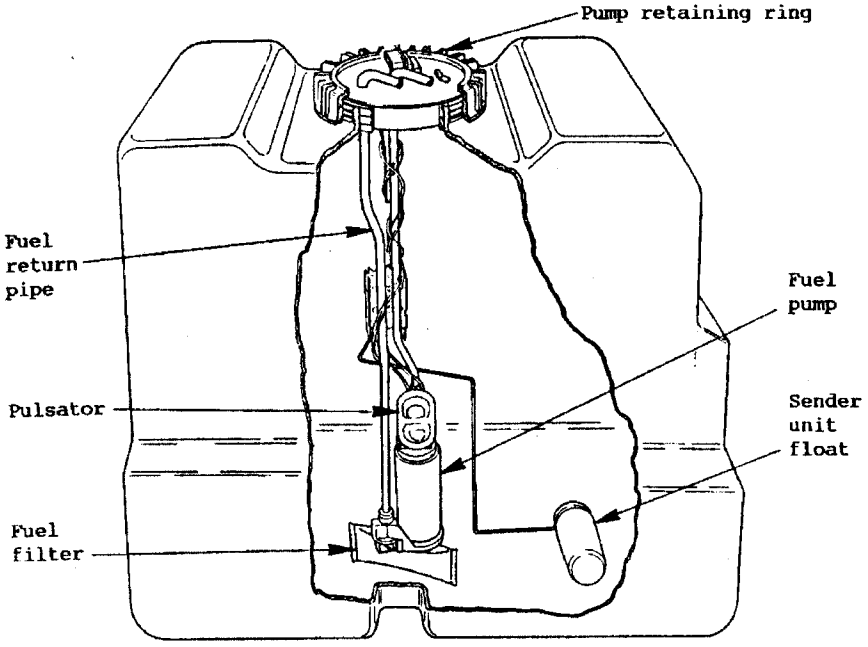

EMK.2 - L FUEL RAIL & PRESSURE REGULATOR

The extruded aluminium fuel rail receives fuel at its left hand end (from the in-line filter) and supplies all four injectors with fuel, the pressure of which is controlled by the fuel pressure regulator fitted to the right hand end of the rail.

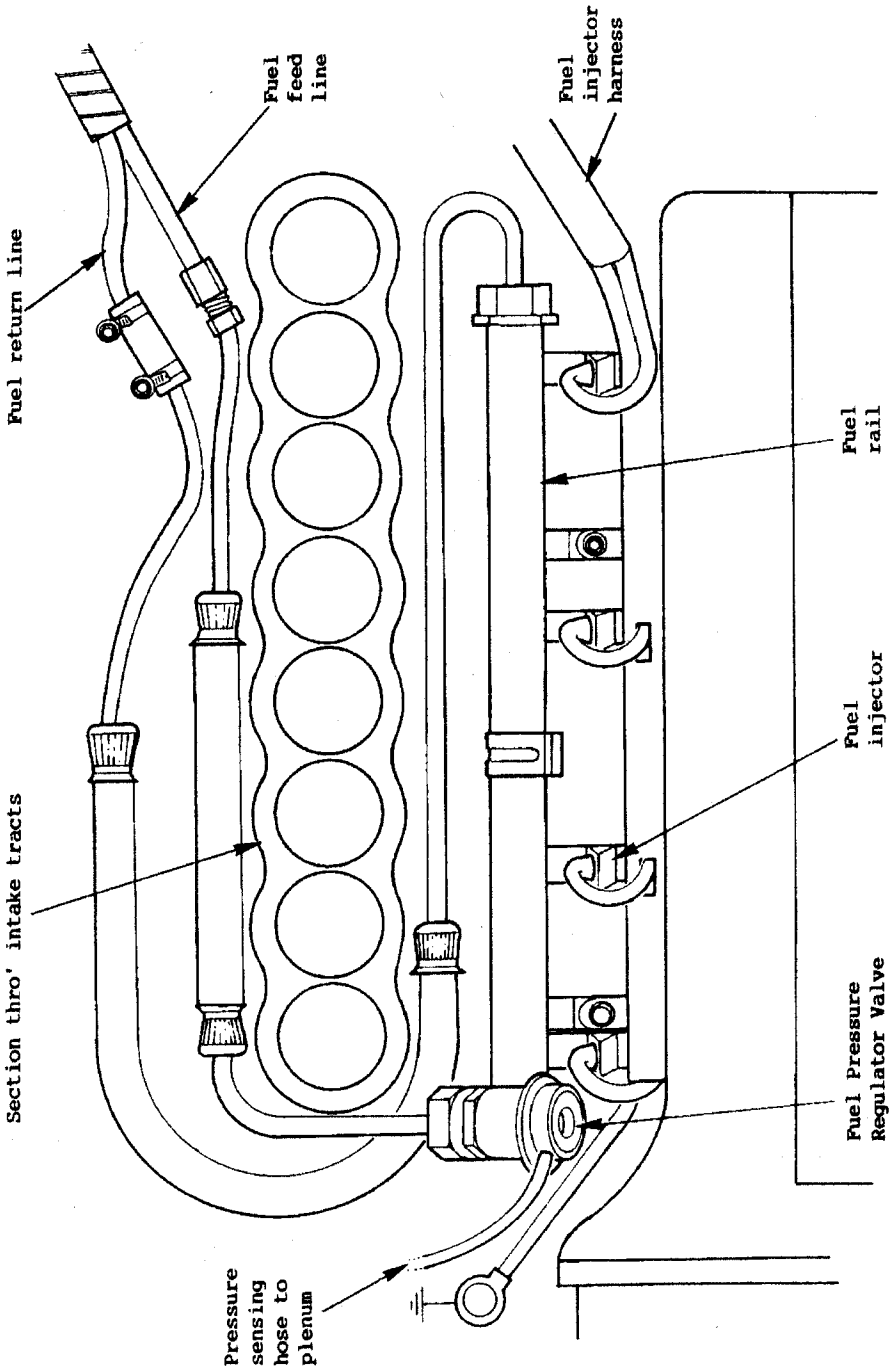
Fuel return line
Fuel feed line
Fuel injector harness
Fuel rail
Fuel injector
Fuel Pressure Regulator Valve
Section thro' intake tracts
Pressure sensing hose to plenum

The pressure regulator assembly is a diaphragm operated relief valve with fuel pump pressure acting on one side of the diaphragm, and regulator spring pressure and intake manifold pressure on the other. The function of the regulator is to maintain a constant pressure differential across the injectors at all times. i.e. a constant difference between fuel pressure supplied to the injector, and inlet manifold pressure at the injector nozzle. By using an inlet manifold pressure signal to supplement regulator spring pressure in the valve, the valve is able to regulate fuel supply pressure in accordance with engine load.

The pressure regulator is not adjustable and is serviced as a complete assembly.

EMK.2 - M FUEL INJECTORS

The port fuel injector assembly is a solenoid-operated device, controlled by the electronic control module (ECM), that meters pressurized fuel to a single engine cylinder. The ECM energizes the low impedance (2.0 ohms) solenoid to open a normally closed ball valve. This allows fuel to flow into the top of the injector, past the ball valve, and through a recessed flow director plate at the injector outlet. The director plate has six machined holes that control the fuel flow, generating a conical spray pattern of finely atomized fuel at the injector tip. Fuel from the tip is directed at the intake valve, causing it to become further atomised and vapourised before entering the combustion chamber.

The ECM uses two injector driver circuits, with one circuit controlling injectors 1 and 3, and one controlling 2 and 4. Each circuit pulses both injectors simultaneously once every crankshaft revolution, with half of the fuel necessary for each cylinders combustion delivered by each injector pulse.

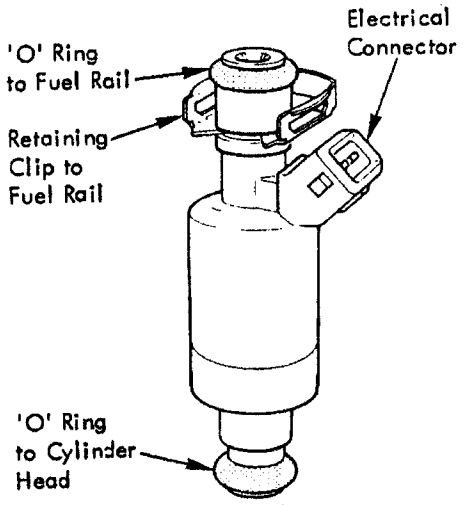

The ECM receives a crankshaft position signal once per engine cycle from the ignition module, and uses these to trigger the 'alternate pairs' injector timing sequence.

EMK.2 - N INTAKE SYSTEM

The intake system incorporates a water heated throttle body containing a primary throttle valve; a plenum chamber integral with eight individual intake tracts; and a lower intake manifold feeding the four bifurcated cylinder head ports. The lower intake manifold contains a fuel injector for each of the four ports and a secondary throttle valve controlling one of the two tracts for each cylinder. These secondary throttle valves are operated by a single vacuum

actuator whose vacuum supply is controlled by a vacuum switching solenoid. At engine speeds below 4,700 rpm, the ECM energises the solenoid valve and supplies vacuum to the actuator, which closes the secondary throttles against spring pressure. At higher engine speeds, the solenoid is de-energised and vents the actuator capsule to atmosphere, allowing the throttles to spring open. By this means, the intake air column inertia effects are tuned both for low speed driveability and idle quality, and also for efficiency at high engine speed. To reduce drain on the battery, the solenoid valve is de-energised with ignition on and engine stopped.

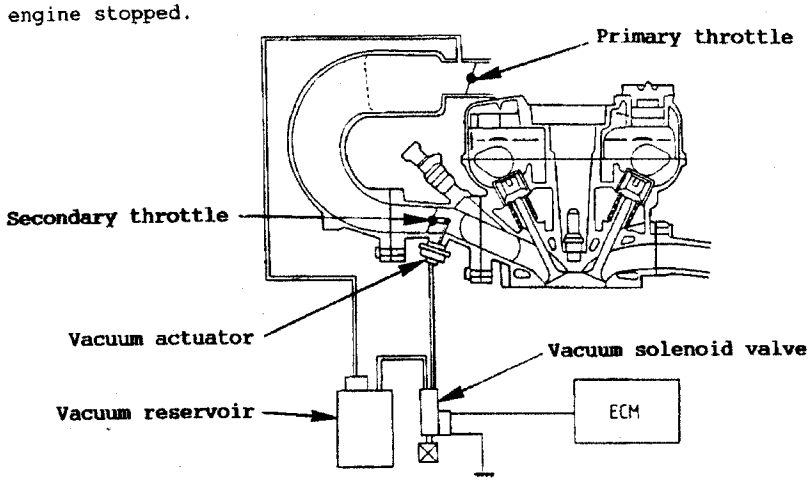

EMK.2 - O IDLE AIR CONTROL (IAC) VALVE

The purpose of the idle air control valve (IAC) valve assembly, is to control engine idle speed, and prevent stalls due to changes in engine load. The IAC valve is mounted on the left hand end of the lower intake manifold, and controls an airway between the upstream side of the primary throttle body (to which it is connected by hose), and an air rail on the secondary intake manifold. This air rail runs beneath the manifold and connects with each of the four intake ports. By moving a conical valve (called a pintle) towards the orifice (to decrease air flow) or away from the orifice (to increase air flow), a controlled amount of air is allowed to by-pass the throttle plate. If rpm is too low, more air is by-passed around the throttle valve to increase rpm. If rpm is too high, less air is by-passed to decrease rpm. In order to aid starting, the valve is opened during engine cranking to an extent governed by the coolant temperature sensor. The colder the coolant, the greater the valve opening.

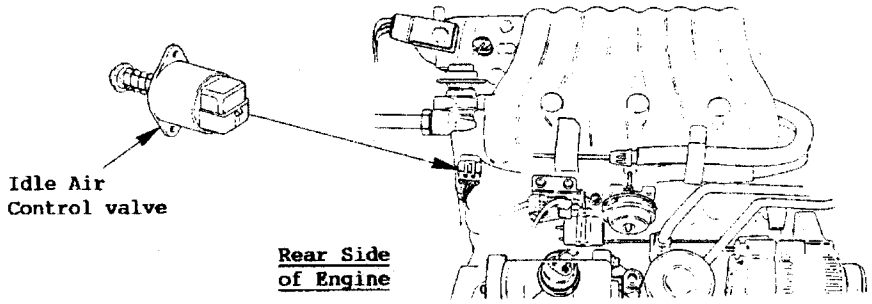

The electronic control module (ECM) moves the IAC valve in small steps called "Counts". These can be measured by the 'Tech 1' scanner tool.

During idle, the proper position of the IAC valve is calculated by the ECM, based on battery voltage, coolant temperature, engine load, and engine rpm. If the rpm drops below specification, and the throttle valve is closed, the ECM senses a near stall condition and calculates a new valve position to prevent stalls. In this way, the ECM "learns" the proper positioning of the IAC valve and retains this information in memory. If the battery, or the power supply to the ECM is disconnected, this part of the ECM memory will be cleared, and idle quality may be degraded slightly until the correct setting is relearned.

Each time the ignition is switched off, the ECM fully extends the IAC pintle to the fully seated position, which it then uses to reset the position count at '0', before retracting to the 80 count 'park' position. Always allow 10 seconds for this process to occur before disconnecting the battery.

If the IAC valve or battery is disconnected before this sequence is completed (or whilst the engine is running), the ECM will assume, on reconnection, that the IAC valve is at 80 counts, and will take time to learn the correct position. To overcome this, after the battery or IAC is reconnected, the ignition should be switched on and then off again for ten seconds. This will allow the IAC to be reset, as described above, before switching on again and starting the engine.

As an additional aid to IAC control, when the engine is first started after a power supply interruption, (which clears the memory), the ECM will carry out an IAC reset when the car is driven above 30 mph on a light throttle, by extending the pintle to the fully seated position for a moment to establish the zero count position. This process, which occurs only once after each power supply re-connection, will not be noticed by the driver, and is designed to regain proper IAC control if the recommended reset procedure is not carried out before starting the engine.

EMK.2 - P DIRECT IGNITION (DI)

The Direct Ignition (DI) system does not use the conventional distributor and coil. This ignition system consists of two separate double ended ignition coils, and an ignition module mounted on a base plate.

A cam angle sensor, related connecting wires, and the electronic spark timing (EST) portion of the ECM make up the remainder the the system.

A distributorless ignition system, such as this one, uses a "waste spark" method of spark distribution. Each cylinder is paired with its opposite number (i.e. 1 with 4 and 2 with 3) with each pair of plugs being connected to a single, double-ended coil such that a spark occurs simultaneously in the cylinder coming up on the compression stroke and in the cylinder coming up on the exhaust stroke.

The cylinder on the exhaust stroke requires very little of the available energy to fire the spark plug. The remaining energy will be used as required by the cylinder on the compression stroke. The same process is repeated when the cylinders reverse roles.

Because of the direction of current flow in the primary winding and thus, in the secondary winding, one plug fires from the centre electrode to the side electrode while the other fires from side electrode to centre electrode.

It is possible in a no load condition for one plug to fire even though the spark plug lead from the same coil is disconnected from the other spark plug. The disconnected spark plug lead acts as one plate of a capacitor, with the engine being the other plate. These two "capacitor plates" are charged as a current surge (spark) jumps across the gap of the connected spark plug. The "plates" are then discharged as the secondary energy is dissipated in an oscillating current across the gap of the spark plug still connected.

EMK.2 - Q CAM ANGLE SENSOR

The cam angle sensor consists of a baseplate and insulated cover mounted on the left hand end of the cylinder head, containing two electronic sensors, and a reluctor disc and vane driven by the exhaust camshaft.

A single vane on the back of the reluctor disc, passes through a hall effect sensor mounted at the bottom of the cam angle sensor, and produces a square wave signal ('sync-pulse') once every two crankshaft revolutions to provide a timing reference for the injection sequence.

A magnetic (reluctance) pick-up at the rear of the cam angle sensor, detects the grooves in the periphery of the reluctor wheel, and enables the ignition module, by measuring the time interval between these pulses, to interpret engine speed. Twelve grooves are provided for this purpose, with positional reference pulses provided by the doubling up of grooves at diametrically opposite points on the disc, which results in one reference pulse every crankshaft revolution. These signals are used to provide electronic spark timing (EST) data.

During cranking, and at engine speeds below 800 rpm, the ignition module (part of the ignition coil pack) controls ignition timing based only on engine speed, but at higher speeds, the ECM takes over control of EST.

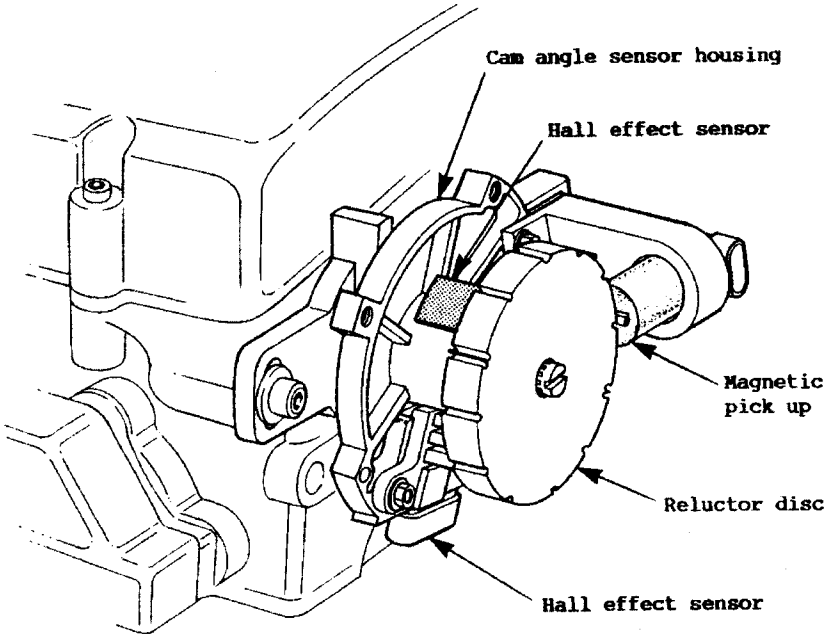

EMK.2 - R IGNITION MODULE & HT COILS

The ignition module and HT coils are mounted as a unit at the left hand side of the engine bay. Each coil provides the spark for two plugs simultaneously.

The ignition module monitors the cam angle sensor signals and sends reference signals to the ECM so that correct spark and fuel injector control can be maintained during all driving conditions. During cranking, the ignition

module monitors the 'sync-pulse' to begin the ignition firing sequence and below 800 rpm the module controls spark advance by triggering each of the two coils at a pre-determined interval based on engine speed only.

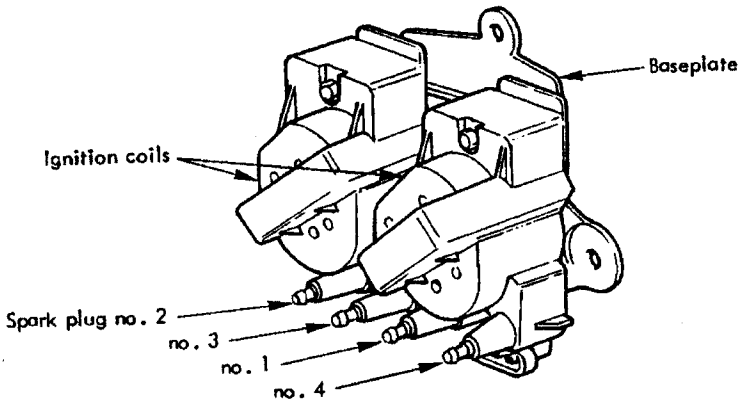

Above 800 rpm the ECM controls the spark timing (EST) and compensates for all driving conditions. The ignition module must receive a 'sync-pulse' and then a cam angle signal in that order to enable a spark to be generated and the engine to start.

EMK.2 - S ELECTRONIC SPARK TIMING (EST)

The electronic spark timing function is incorporated into the ECM 'Mem-Cal' cartridge. The ignition module sends a square wave signal, generated from the camshaft sensor pulses, to the ECM which interprets engine speed and crankshaft position. While the engine is being cranked, the ignition module controls spark timing. This is referred to as Bypass Timing Mode because the ignition module 'bypasses' the ECM. When engine speed exceeds 800 rpm the ECM applies a 5 volt signal to the module which then switches spark timing control from the module to the ECM.

In this mode the ECM uses various sensor inputs to determine the optimum ignition timing and sends a square wave signal to the ignition module which then triggers the ignition coils.

If a fault is detected in the EST circuit, a trouble code will be set, and the ignition module will switch into bypass mode to enable the engine to continue running, albeit with reduced performance.

EMK.2 - T ELECTRONIC SPARK CONTROL (ESC)

This system comprises an engine 'knock' sensor mounted in the right hand side of the cylinder block, and an ESC module which is incorporated into the ECM 'Mem-Cal' cartridge.

The ignition timing required for optimum performance can lead, under certain operating conditions, to detonation of the fuel mixture in the combustion chamber, causing excessive heat and pressures and a characteristic 'knocking' noise. If allowed to continue unchecked, major engine damage can occur. The ESC system allows the engine to adhere as closely as possible to the optimum ignition timing without a damaging level of detonation. When the knock sensor detects the

onset of detonation, the ECM retards ignition to a safe level, and then progressively advances ignition until detonation is again detected and the cycle repeats.

Knock Sensor

The knock sensor is mounted in the cylinder block and is able to identify the detonation 'knocking' noise and produce an AC output voltage which increases with the severity of the knock. The ECM monitors this signal and adjusts the electronic spark timing (EST) as necessary to reduce detonation to a safe level.

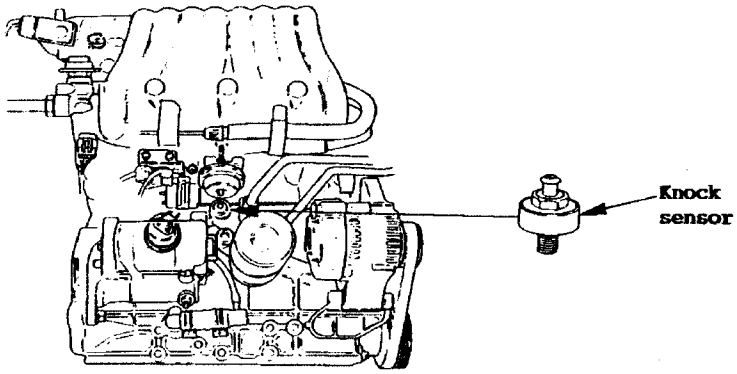

EMK.2 - U POSITIVE CRANKCASE VENTILATION

A positive crankcase ventilation (PCV) system is used to provide complete scavenging of the crankcase vapours. Fresh air from the air cleaner is supplied to the crankcase, where it mixes with blow-by gases, before being drawn into the intake plenum chamber to be consumed by normal combustion.

The system comprises of a PCV valve fitted into the right hand end of the camshaft cover, and connected to the intake plenum chamber, and an oil seperator located at the left hand end of the camshaft cover, with connections to the cam cover, crankcase and air intake trunking.

PCV Valve

The PCV valve is a spring loaded needle-type valve pressed into the right hand end of the camshaft cover. A hose connects the valve with the right hand end of the intake plenum chamber. When the engine is stopped, the spring acts to keep the valve closed and prevent any oil/air mixture entering the plenum and causing difficulty in starting.

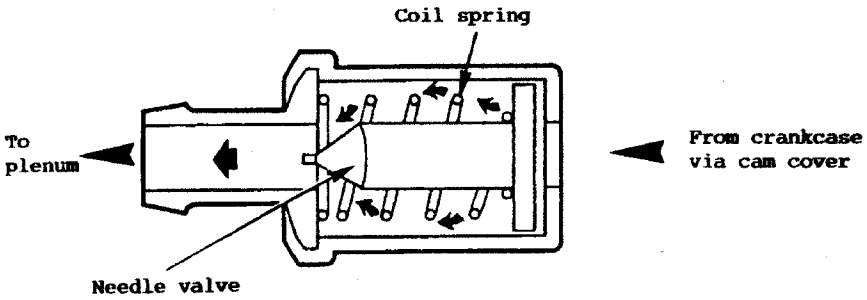

With the engine running, the negative pressure in the intake plenum opens the valve and draws blow-by gases into the engine. At idle, when intake vacuum is high, the needle valve restricts the flow of gases to maintain idle quality. As the throttle opening is increased, and intake plenum vacuum decreases, the needle valve allows a greater degree of purging to take place, until as boost pressure is developed, and plenum pressure starts to become positive, the valve shuts under spring pressure. Purging then takes place via the oil seperator.

Oil Seperator

The oil seperator is mounted on a bracket at the left hand end of the cam cover, and is connected between the cam cover and the intake trunking, downstream of the air cleaner. At high engine speeds, when pressure in the intake hose is negative, or if abnormal crankcase pressure should arise, fumes from the engine pass through the oil seperator into the intake trunking to be consumed by combustion. A labyrinth of perforated plates and filters within the seperator, ensures that oil particles are seperated out from the blow-by gas, and returned to the sump via a hose connected to the bottom of the unit. A non-return valve in this drain hose ensures that no oil can be forced up from the sump into the seperator.

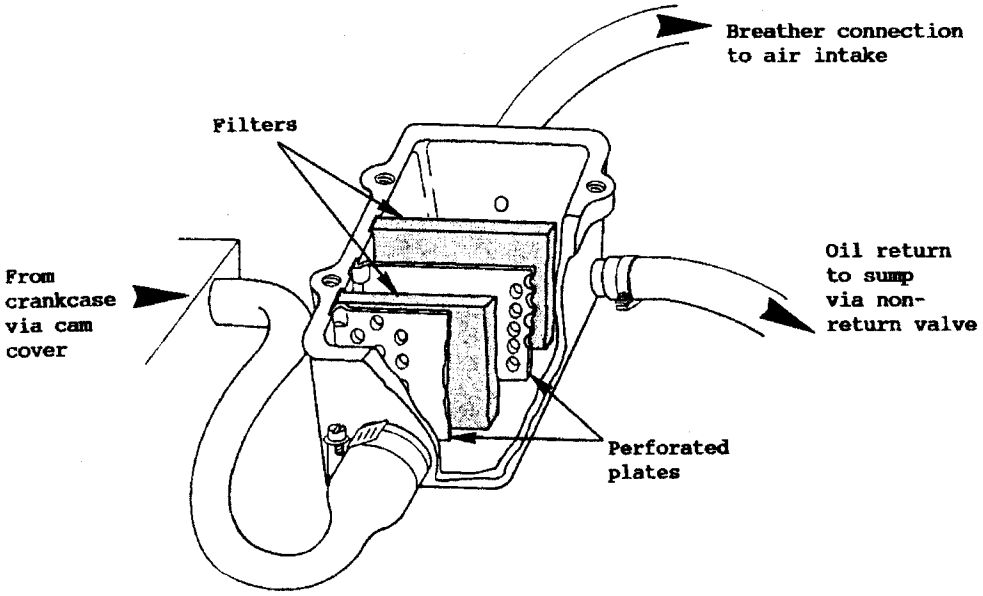

EMK.2 - V EXHAUST GAS RECIRCULATION

The exhaust gas recirculation (EGR) system is used to lower NOx (nitrous oxide) levels caused by high combustion temperatures. A vacuum operated diaphragm valve is used to feed small amounts of exhaust gas back into the intake plenum chamber in order to reduce combustion temperature. Too much recirculation would result in poor combustion.

The EGR valve is mounted on the left hand end of the intake plenum chamber, and controls the flow of exhaust gas in a pipe connecting the exhaust manifold with the plenum. The diaphragm valve is normally held closed by spring pressure, and is opened by the application of vacuum to the top of the diaphragm. The

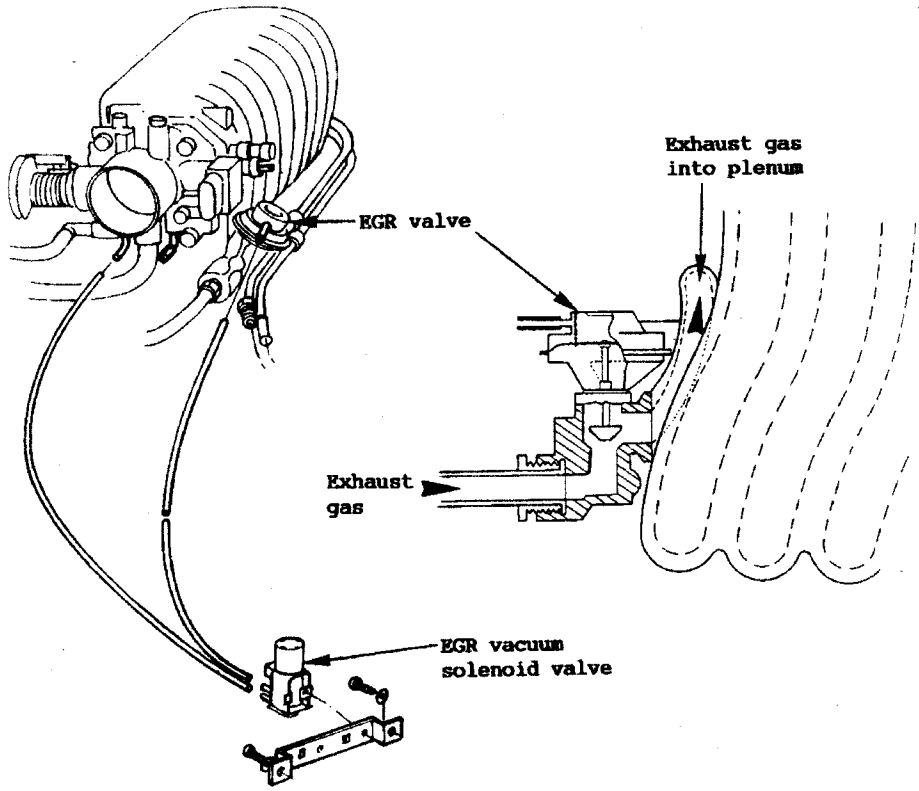

vacuum line is controlled by a solenoid valve (mounted on the left hand wheelarch), itself switched by the E.C.M.. The E.C.M. energises (opens) the solenoid valve, to permit the throttle edge ported vacuum signal to be applied to the E.G.R. valve and allow exhaust gas to recirculate, under the following conditions:

- above a specified coolant temperature
- throttle opening above idle
- engine speed above idle
- MAP indicating engine under load
- above a certain vehicle speed
- above a certain manifold air temperature (MAT)

EMK.2 - W TURBO BOOST CONTROL

In order to allow the turbocharger characteristics to be tuned for good mid-range response without excessive boost pressure being delivered at high engine speed, the turbocharger turbine housing incorporates a wastegate valve, which, when open, diverts a proportion of the exhaust gas away from the turbine. The wastegate valve is operated by a spring/pressure casule which uses a coil spring to hold the valve closed, and a diaphragm pressure chamber connected by hose to the turbo compressor outlet, to oppose the spring, and open the valve at a specified boost pressure.

A turbo boost control solenoid valve, located at the left hand side of the engine bay, is connected into the turbo wastegate capsule control pressure line.

When the solenoid valve is de-energised (closed), the control pressure line is intact and the wastegate capsule controls maximum boost pressure to 0.41 bar (6.0 lb/in²). If the solenoid valve is energised (open), the wastegate capsule control pressure line is vented to atmosphere so that the capsule spring acts to keep the wastegate closed, with boost pressure limited only by the engine control system.

The solenoid valve functions as a frequency valve, which is pulsed many times a second by a square wave signal of constant frequency but varying pulse width (Pulse Width Modulation). The proportion of time for which the valve is energised controls the amount of 'extra' boost that may be developed before the wastegate opens. At engine speeds below 2,900 rpm, the control pressure line is intact, with boost limited by the capsule to 0.41 bar (6.0 lb/in²).

At engine speeds above 2,900 rpm with throttle openings greater than 25%, the solenoid valve pulse width is modulated to allow boost pressure to rise in proportion to throttle opening, up to a maximum of 0.65 bar (9.6 lb/in²) at full throttle.

Under wide open throttle transient conditions, a short duration of overboost may occur. As an engine safeguard, in case of a boost control system failure, **the ECM will switch off the injectors if boost pressure in excess of 0.92 bar (13.5 lb/in²) is detected for more than 0.5 second.** All quoted pressures are approximate and **at sea level.**

Note that because the ECM monitors boost pressure via the MAP sensor, maximum boost pressure is controlled to absolute values which are independent of atmospheric pressure. For this reason, the maximum readings of the boost gauge in the instrument panel will tend to rise with increasing altitude and decreasing

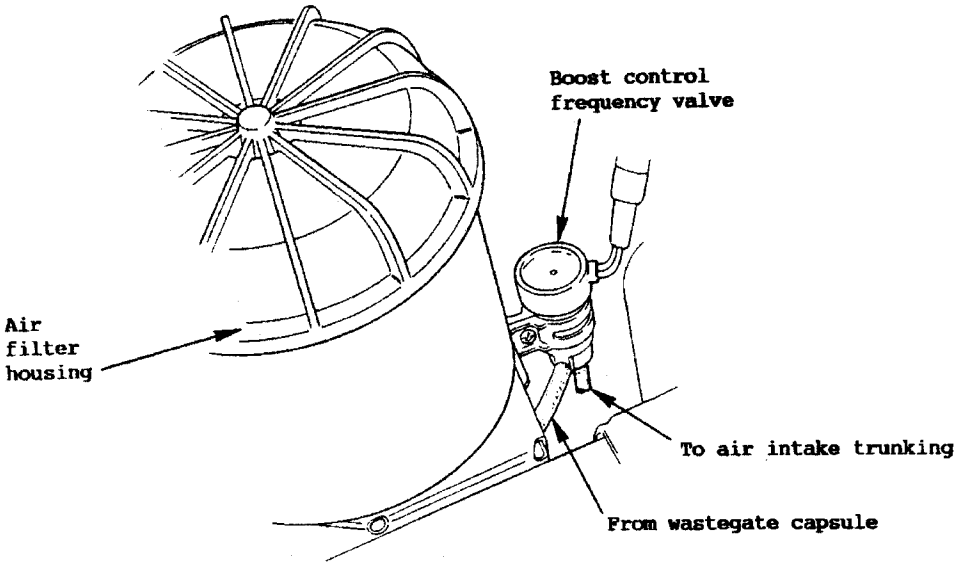

atmospheric pressure. i.e. the engine receives the same boost regardless of atmospheric pressure, whereas the gauge displays boost pressure relative to atmospheric.

SECTION EMK.3

COMPONENT DIAGNOSIS & REPLACEMENT PROCEDURE

	Sub-Section	Page
Electronic Control Module (ECM)	EMK.3 - A	2
Engine Coolant Temperature Sensor (CTS)	EMK.3 - B	3
Mass Air Temperature (MAT) Sensor	EMK.3 - C	3
Manifold Absolute Pressure (MAP) Sensor	EMK.3 - D	4
CO Potentiometer	EMK.3 - E	6
Throttle Position Sensor (TPS)	EMK.3 - F	7
Vehicle Speed Sensor (VSS)	EMK.3 - G	7
Power Steering Pressure Switch (PSPS)	EMK.3 - H	8
Fuel Control System	EMK.3 - I	9
Fuel Pump	EMK.3 - J	10
Fuel Rail, Pressure Regulator and Injectors	EMK.3 - K	12
Secondary Throttle Valve Control	EMK.3 - L	15
Idle Air Control (IAC) Valve	EMK.3 - M	17
Direct Ignition (DI) System	EMK.3 - N	19
Cam Angle Sensor	EMK.3 - O	22
Ignition Module & HT Coils	EMK.3 - P	22
Electronic Spark Timing (EST)	EMK.3 - Q	22
Electronic Spark Control (ESC)	EMK.3 - R	24
Positive Crankcase Ventilation (PCV)	EMK.3 - S	26
Exhaust Gas Recirculation (EGR)	EMK.3 - T	26
Turbo Boost Control	EMK.3 - U	29
Vacuum Connection Diagram	EMK.3 - V	30

EMK.3 - A ELECTRONIC CONTROL MODULE

If the diagnostic procedures call for the Electronic Control Module (ECM) to be replaced, first check that the correct ECM/Mem-Cal assembly is fitted by using the 'Tech 1' tool to check the PROM ID. On the Lotus Elan, the ECM is serviced only as a complete assembly, including the Mem-Cal cartridge. The Mem-Cal is not serviced as a separate item, but only as part of the sealed ECM assembly. The Mem-Cal access cover on the ECM is sealed at the factory, and if the seal is broken, the engine warranty is invalidated.

Caution: To prevent internal ECM damage, the ignition must be "OFF" when disconnecting or reconnecting power to ECM (for example, battery cable, ECM pigtail, ECM fuse, jumper cables, etc.). The ignition should be "OFF" for at least 10 seconds before disconnecting power to the ECM so the IAC valve has time to move to its 'park' position.

Replacement of ECM/'Mem-Cal' Assembly

1. Ensure the ignition is switched off for at least 10 seconds before disconnecting the negative battery lead.

2. On left hand drive cars: From within the driver's footwell, slacken the two retaining nuts to allow the ECM to be tilted clear of the mounting bracket slots, and withdraw the unit from the bracket. Unplug the two harness connector blocks from the ECM and remove the unit from the car.

LHD Cars

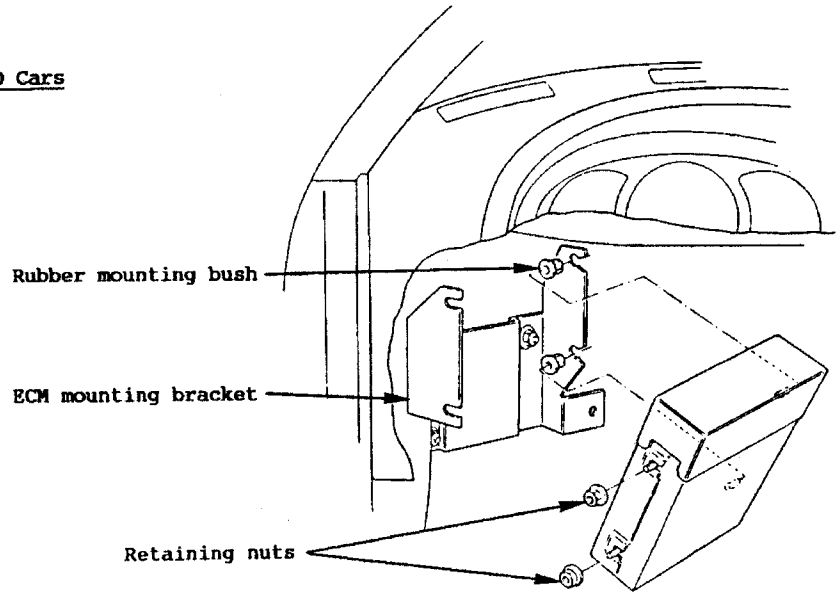

On right hand drive cars: Release the glovebox stop bracket to allow the glovebox to swing down fully, or withdraw the pivot pins and remove the glovebox completely.

EMK.3 - A ELECTRONIC CONTROL MODULE

If the diagnostic procedures call for the Electronic Control Module (ECM) to be replaced, first check that the correct ECM/Mem-Cal assembly is fitted by using the 'Tech 1' tool to check the PROM ID. On the Lotus Elan, the ECM is serviced only as a complete assembly, including the Mem-Cal cartridge. The Mem-Cal is not serviced as a separate item, but only as part of the sealed ECM assembly. The Mem-Cal access cover on the ECM is sealed at the factory, and if the seal is broken, the engine warranty is invalidated.

Caution: To prevent internal ECM damage, the ignition must be "OFF" when disconnecting or reconnecting power to ECM (for example, battery cable, ECM pigtail, ECM fuse, jumper cables, etc.). The ignition should be "OFF" for at least 10 seconds before disconnecting power to the ECM so the IAC valve has time to move to its 'park' position.

Replacement of ECM/'Mem-Cal' Assembly

1. Ensure the ignition is switched off for at least 10 seconds before disconnecting the negative battery lead.

2. On left hand drive cars: From within the driver's footwell, slacken the two retaining nuts to allow the ECM to be tilted clear of the mounting bracket slots, and withdraw the unit from the bracket. Unplug the two harness connector blocks from the ECM and remove the unit from the car.

LHD Cars

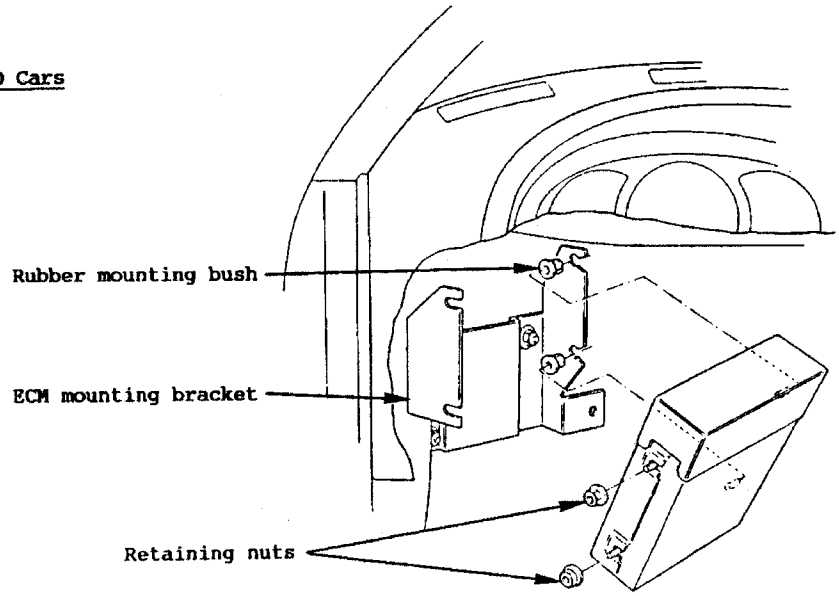

On right hand drive cars: Release the glovebox stop bracket to allow the glovebox to swing down fully, or withdraw the pivot pins and remove the glovebox completely.

Slacken the two retaining nuts to allow the ECM to be tilted clear of the mounting bracket slots, and withdraw the unit from the bracket. Unplug the two harness connector blocks from the ECM and remove the unit from the car.

RHD Heater Cars

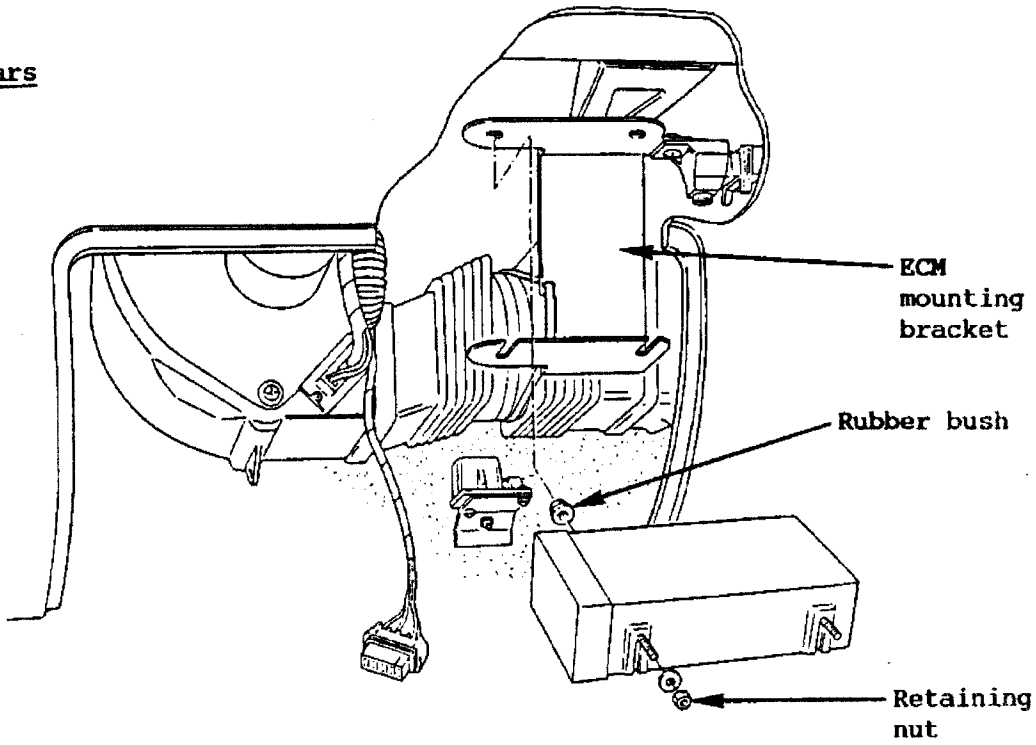

RHD Air Conditioned Cars

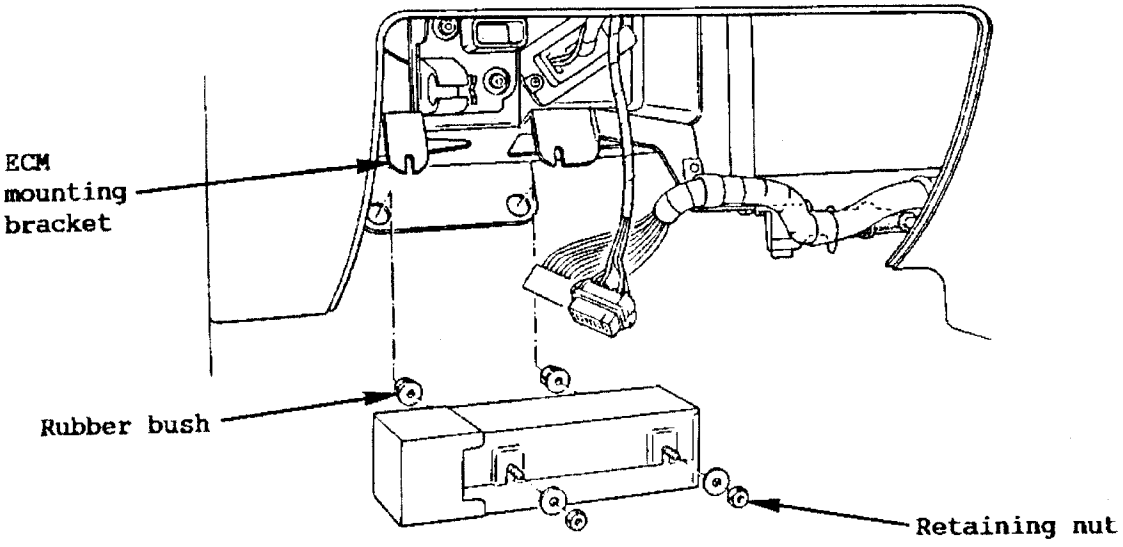

3. To refit the ECM, locate the studs on one side of the unit into the rubber bushes in the bracket, locate the remaining studs in the slots and fix in the

mounting bracket with the two nuts. Fit the harness connectors, and reconnect the battery.

Functional Check

Turn on ignition and enter diagnostics. Code 12 should flash at least 3 times (if no other codes are present). This indicates that the ECM/Mem-Cal assembly is installed and functioning correctly.

If trouble code 51 is displayed, or if the 'check engine' light comes on constantly with no codes, the ECM should be considered defective and replaced.

EMK.3 - B ENGINE COOLANT TEMPERATURE SENSOR

The coolant temperature sensor is fitted in the thermostat housing on the left hand end face of the cylinder head.

A 'Tech 1' scanner tool displays the engine temperature in degrees Celsius. After the engine is started, the temperature should rise steadily to about 82°C then stabilise when the thermostat opens. If the engine has not been run for several hours (overnight) the coolant temperature and MAT temperatures should be close to each other. A fault in the coolant sensor circuit should set a Code 14 or 15. The code charts in section EMK.4 also contain a chart to check for sensor resistance values relative to temperature.

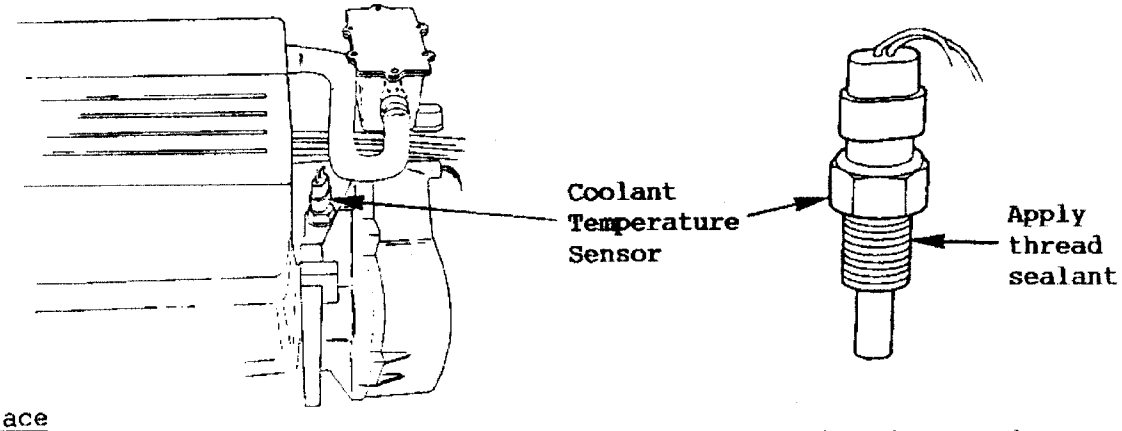

To Replace

Drain sufficient coolant to empty the thermostat housing, release the electrical connector and unscrew from the housing.

Note: Take care when handling the sensor as any damage may seriously affect the operation of the engine management system.

Before refitting a sensor, apply thread sealant to the thread, (pre-applied on a new sensor) carefully fit into the thermostat housing, and torque tighten to 20 Nm (15 lbf.ft). Refit electrical connector and refill with the approved coolant mixture.

EMK.3 - C MASS AIR TEMPERATURE (MAT) SENSOR

The MAT sensor is fitted into the inlet of the intake plenum chamber.

A 'Tech 1' scanner tool displays the temperature of the air entering the engine, which should be close to ambient air temperature when engine is cold, and rise as engine bay temperature increases. If the engine has not been run for several hours (overnight), the readout of MAT sensor temperature and coolant temperature should be close to each other. A failure in the MAT sensor circuit should set a Code 23 or 25. The code charts in section EMK.4 also contain a chart to check for sensor resistance values relative to temperature.

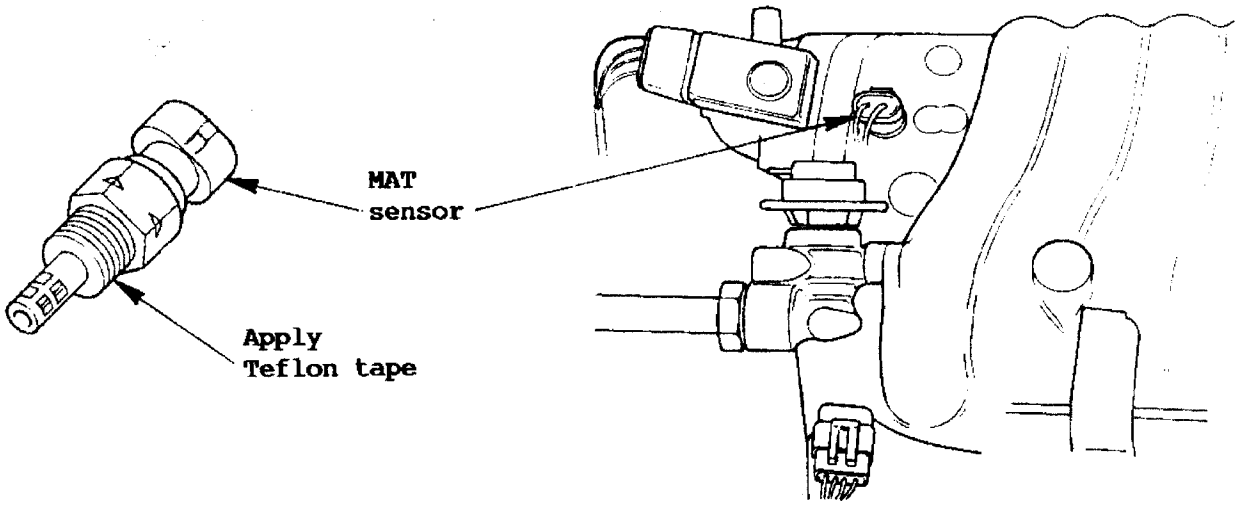

To Replace

Unplug the electrical connection and unscrew the sensor from the plenum chamber.

On re-fitting, apply 1½ turns of teflon tape to the threads of the sensor, and torque tighten to 20 Nm (15 lbf.ft).

EMK.3 - D MANIFOLD ABSOLUTE PRESSURE (MAP) SENSOR

The MAP sensor is fitted in the engine bay at the centre top of the cabin front bulkhead, beneath the windscreen landing.

A 'Tech 1' scanner tool displays manifold pressure in kPa and MAP sensor signal voltage. Low pressure (high vacuum) displays a low voltage while a high pressure (low vacuum) displays a high voltage. A failure in the MAP sensor circuit should set a Code 33 or 34 and using the applicable trouble code chart (section EMK.4) will lead to the cause of the problem. A Code 33 may be set if a rough or unstable idle exists.

For access to the MAP sensor, release the two screws securing the mounting plate to the front bulkhead, and withdraw. Disconnect the electrical and pressure hose connections.

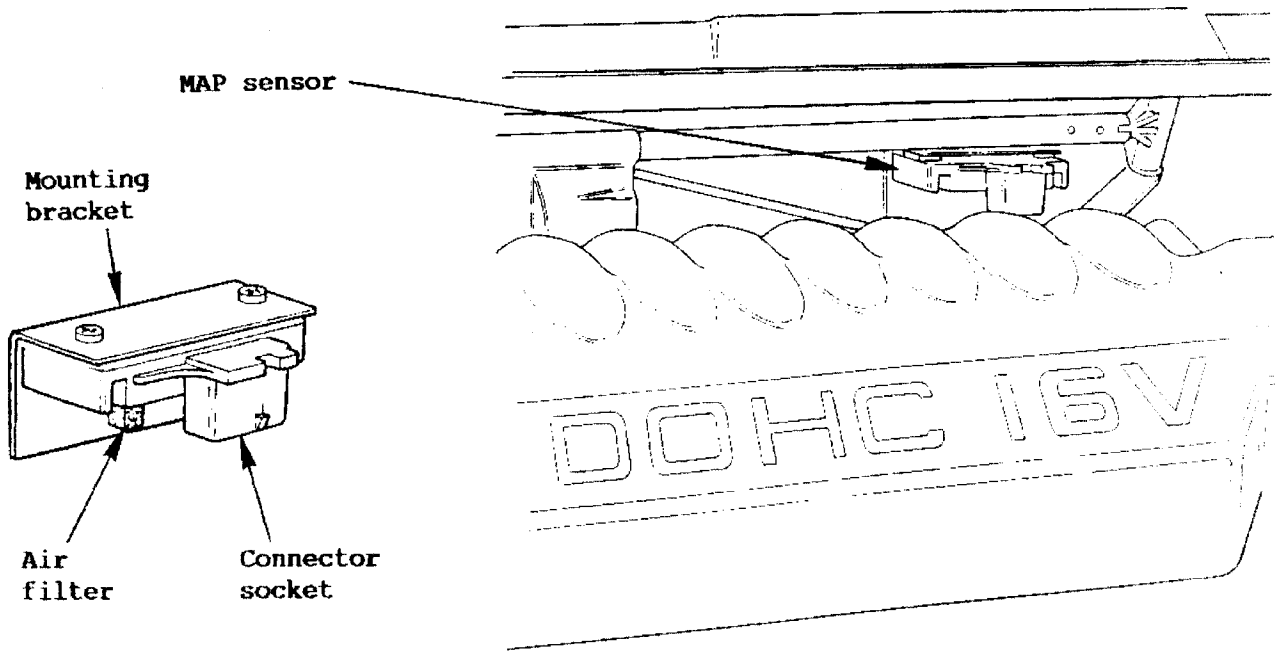

Circuit Description

The MAP sensor is a solid state sensor which is provided with a 5 volt reference source and an earth, and produces an output signal voltage to indicate intake manifold pressure.

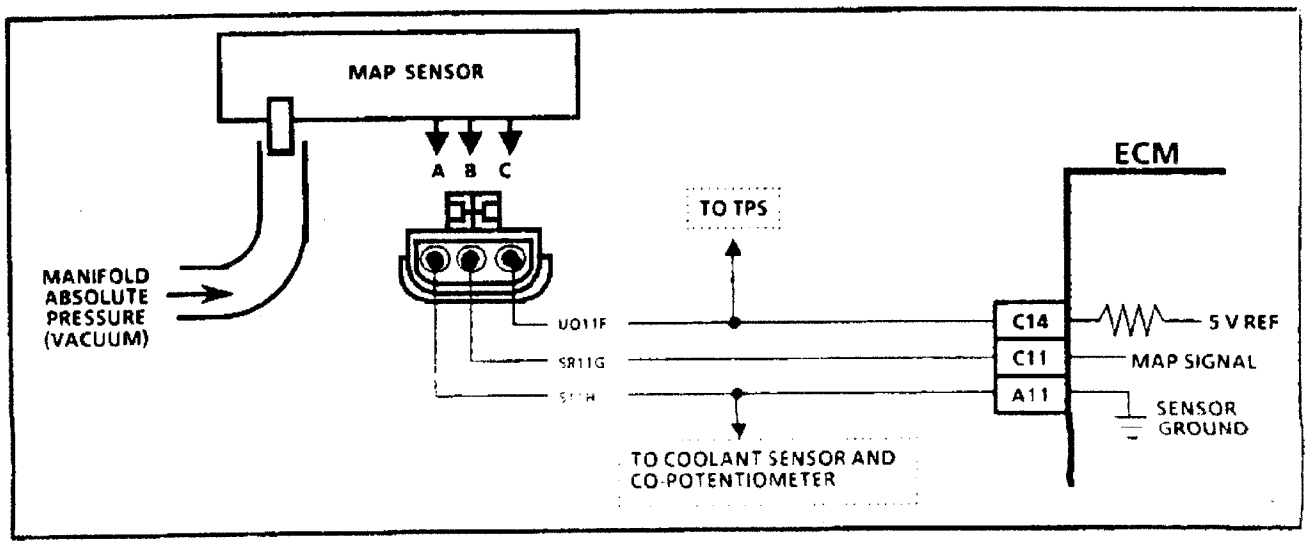

Diagnostic Chart - MAP

1. . IGNITION 'ON', ENGINE 'OFF'
. 'TECH 1' TOOL SHOULD INDICATE ATMOSPHERIC PRESSURE (COMPARE WITH A BAROMETER) AND APPROX. 2.5 VOLTS.
. DOES IT?

YES → 2.

NO →
. CHECK WIRING BETWEEN MAP SENSOR & ECM.
. IF WIRING OK, REPLACE SENSOR.
. IF READING STILL INCORRECT, REPLACE ECM

2. . DISCONNECT VACUUM HOSE FROM MAP SENSOR
. CONNECT A HAND VACUUM PUMP TO MAP SENSOR
. START ENGINE (SEE NOTE 2)
. APPLY VARIOUS VACUUMS TO THE SENSOR AND NOTE OUTPUT VOLTAGE. SHOULD BE IN ACCORDANCE WITH CHART.
IS IT?

YES → 3.

NO →
CHECK SENSOR HOSE AND CONNECTIONS FOR LEAKAGE OR RESTRICTION. IF NO FAULT FOUND, REPLACE MAP SENSOR

3. NO TROUBLE FOUND. CHECK SENSOR HOSE FOR LEAKAGE OR RESTRICTION. ENSURE HOSE SUPPLIES VACUUM ONLY TO SENSOR

Vacuum (kPa)	Output Voltage
0	2.3 to 2.5
20	1.6 to 1.8
40	1.2 to 1.4
60	0.7 to 0.9

Clear codes, confirm closed loop operation and no check engine light.

Test Description

Numbers below refer to underlined numbers on the diagnostic chart.

1. Checks MAP sensor output voltage to the ECM. This voltage, without engine running, represents barometer reading to the ECM. Comparison of this BARO reading with a known good vehicle with the same sensor may identify a faulty MAP sensor. Readings should be within ± 0.4 volts.
2. Checks that the output voltage varies correctly with pressure. Upon applying vacuum to the sensor, the change in voltage should be instantaneous. A slow voltage change indicates a faulty sensor.
   NOTE: The engine must be running in this step or the 'Tech 1' will not indicate a change in voltage. It is normal for the Check Engine light to come on and for the system to set a Code 33 during this step. Make sure the code is cleared when this test is completed.
3. Check vacuum hose to sensor for leaking or restriction. Ensure no other vacuum devices are connected to the MAP sensor.

EMK.3 - E CO POTENTIOMETER

The CO potentiometer is a variable resistor, the adjustment of which controls the base setting of the air/fuel ratio. The potentiometer is located ahead of the glovebox (RHD) or by the ECM in the driver's footwell (LHD).

To Adjust

1. With the air conditioning and all electrical ancillaries switched off, run the engine up to normal operating temperature as indicated by the switching on of the engine cooling fans.

Right Hand Drive Heater

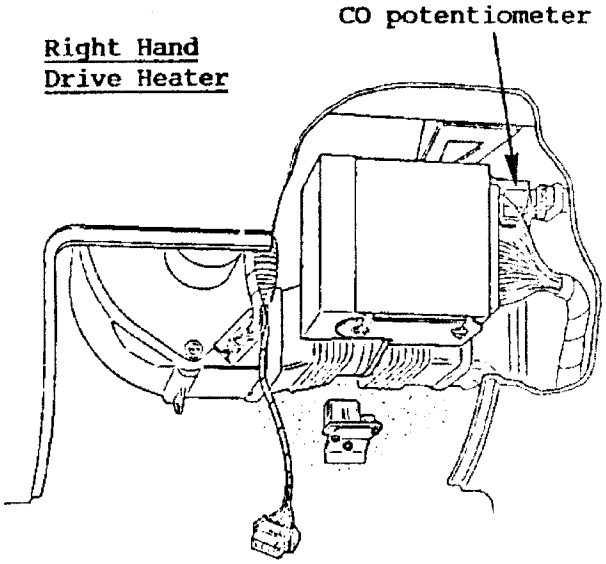

Left Hand Drive

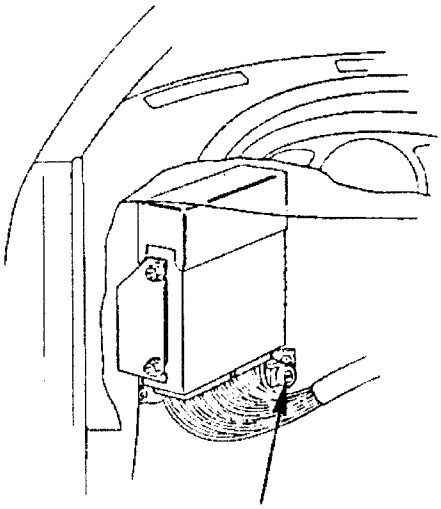

Right Hand Drive A.C.

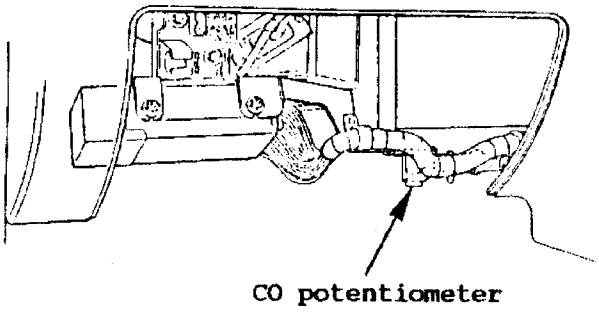

2. Connect an exhaust gas analyser to measure CO level at the tailpipe, and record the reading at idle when the cooling fans have cycled off. Specification = 1.0% ± 0.5%

3. If necessary, prise off the anti-tamper cap protecting the CO potentiometer adjustment screw, and adjust to achieve specification.

4. Wait until the fans have cycled on and off again before rechecking CO reading, and adjusting further if necessary.

5. Fit a new anti-tamper cap (A100E6152) over the adjustment screw, and refit the glovebox.

EMK.3 - F THROTTLE POSITION SENSOR (TPS)

The throttle position sensor is fitted to the rear end of the throttle spindle on the primary throttle body.

A 'Tech 1' scanner tool displays throttle position in volts. The 'Tech 1' tool should display 0.4 volts with the throttle closed (as at idle) and ignition "ON". Voltage should increase at a steady rate as the throttle opens. Voltage should be near 4.0 volts at wide open throttle (WOT).

The electronic control module (ECM) has the ability to auto-zero the throttle position sensor (TPS) voltage if it is below 0.66 volts. This means that any voltage less than 0.66 V will be determined by the ECM to be 0% throttle. 'Tech 1' tools also have the ability to display the throttle angle and should display 0% when the throttle is closed, and increase smoothly to near 100% at WOT. A failure in the TPS or circuit should set a Code 21 or 22.

To Remove

Unplug electrical connector, release the two fixing screws and withdraw the sensor from the end of the throttle spindle.

To Replace

Fit the sensor on to the end of the throttle spindle, and retain with the two fixing screws. Select 'TPS' on the 'Tech 1' tool and adjust the position of the switch to obtain a 0.4 V reading before tightening the screws to 2.0 Nm (18 lbf.in)

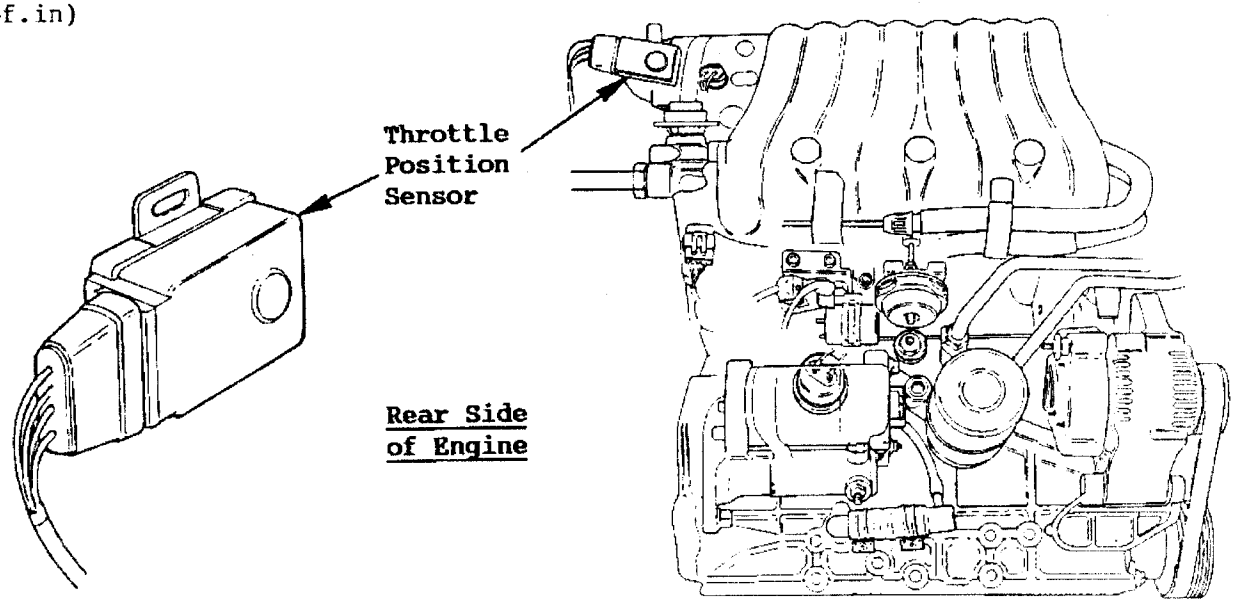

EMK.3 - G VEHICLE SPEED SENSOR (VSS)

The vehicle speed sensor is incorporated into speedometer head.

A 'Tech 1' scanner tool MPH display should closely match the speedometer reading with the drive wheels turning. A failure in the vehicle speed sensor (VSS) circuit should set a code 24.

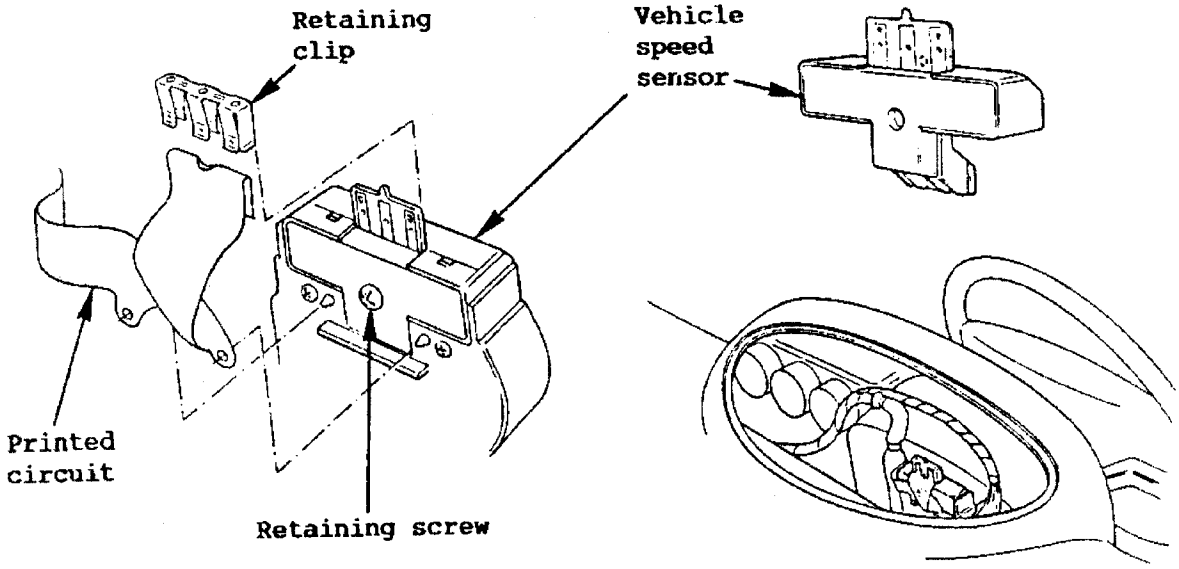

To Replace

Remove the access panel from the top of the instrument binnacle. The VSS is a small black rectangular module fixed to the top rear of the speedo head. Pull off the printed circuit connector from the top of the VSS, and use a small cranked cross head screwdriver to release the single central recessed fixing screw.

EMK.3 - H POWER STEERING PRESSURE SWITCH (PSPS)

The PSPS is a normally open switch on the power steering pump, which is closed by high pump pressure, enabling the ECM to command more IAC valve opening and prevent engine stalling.

- a switch that will not close, or an open circuit in the supply line may cause engine stalling when steering loads are high.
- a switch that will not open, or an earthed supply line may affect idle quality, and prevent the A/C relay energising.

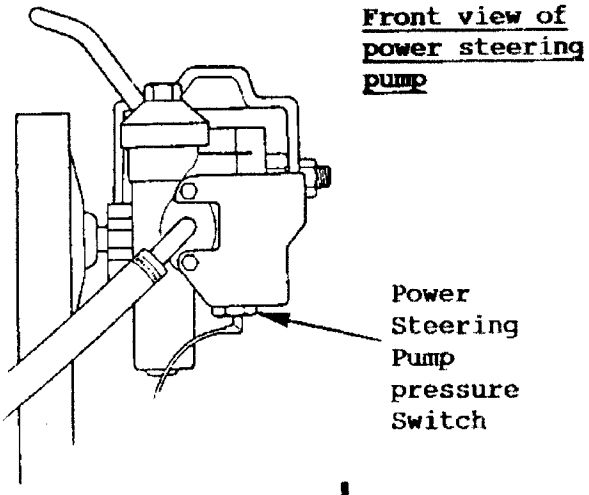

Circuit Description

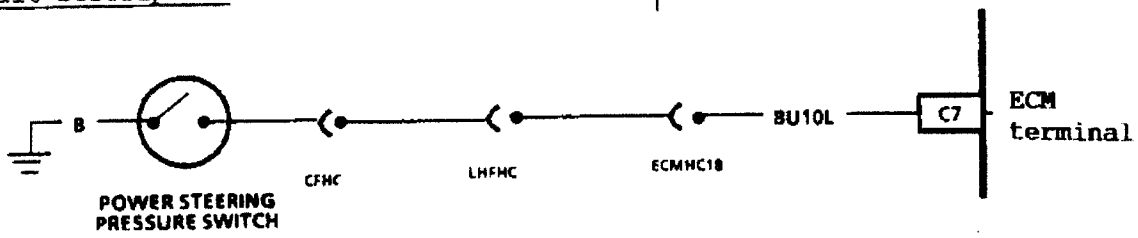

Diagnostic Chart - PSPS

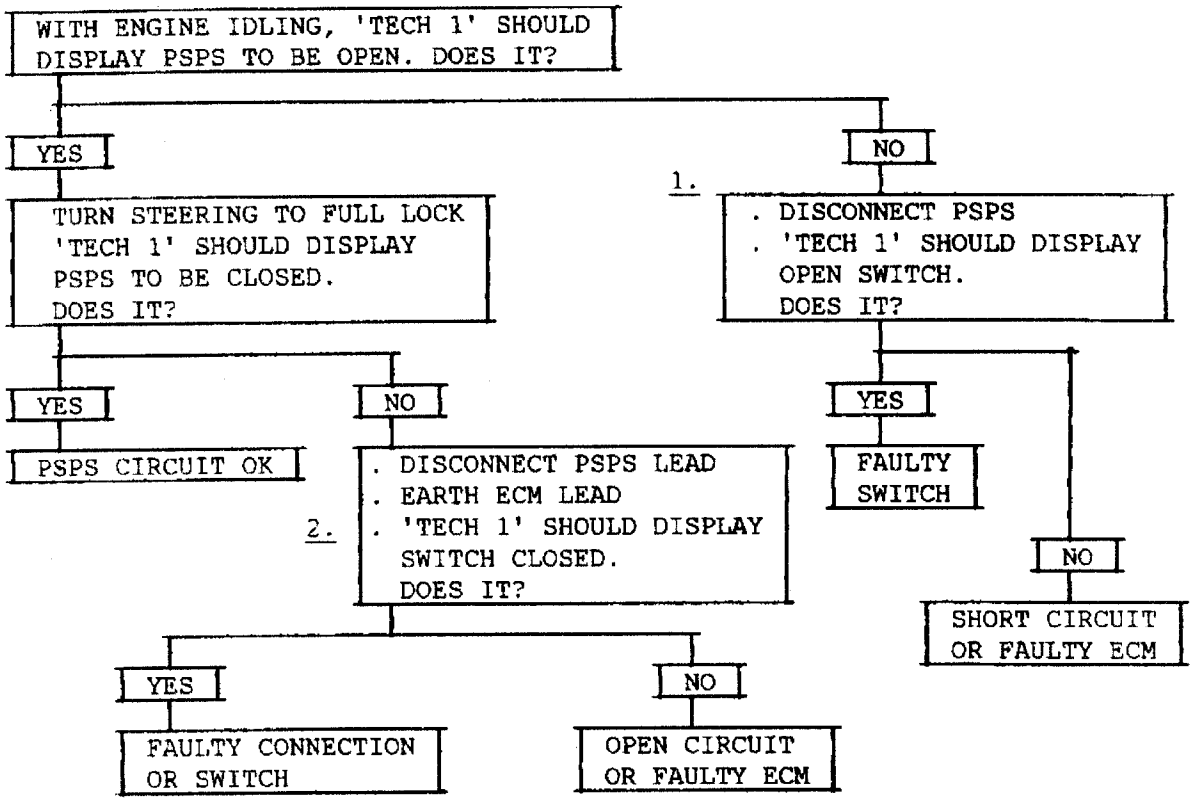

Test Description

1. Checks to determine if supply lead is shorted to ground.
2. This should simulate a closed switch.

EMK.3 - I FUEL CONTROL SYSTEM

Some failures in the fuel system will result in a condition where the "Engine Cranks But Won't Run". If this condition exists, see chart EMK.4 - 3. This chart will determine if the problem is caused by the ignition system, ECM or fuel pump circuit. If it is determined to be a fuel problem, Chart EMK.4 - 5 or EMK.4 - 7 should be used. This includes the injectors, pressure regulator, fuel pump and fuel pump relay. The fuel system wiring schematic diagram is covered on the facing page of Chart EMK.4 - 5.

WARNING: - Safety Precautions

i) To minimise the risk of fire and personal injury, relieve the fuel system pressure before servicing the fuel rail or any related component. See 'Fuel Pressure Relief Procedure' below.
ii) To reduce the possibility of sparks occurring when a fuel line is disconnected, or when fuel vapour is present, the negative battery cable should be disconnected.
iii) When fuel lines are disconnected, absorb escaping fuel under residual pressure in an absorbent cloth and dispose of safely.

Fuel Pressure Relief Procedure

This procedure should be used prior to disconnecting any part of the fuel line except the unpressurised return line.

- Trip the inertia switch (RHD: in battery compartment; LHD: behind left hand speaker trim panel) to disconnect the fuel pump feed, and start the engine.
- After the engine stops from fuel starvation (crank for at least 60 secs if non starter), crank the engine for at least 5 secs to reduce remaining fuel pressure. Disconnect the negative battery cable.
- Fuel connections may now be opened using a shop towel for protection from any residual fuel pressure, and to absorb the small amount of fuel escaping from the fuel lines.

EMK.3 - J FUEL PUMP

To establish if fuel pump performance is satisfactory, proceed as follows:

Tools Required: - Fuel pressure test gauge T000T0899
- Fuel pressure test hose T000T1083

1. **WARNING:** Relieve system fuel pressure as detailed in section EMK.3 - I.

2. Use a shop towel for protection from any residual fuel pressure, and to absorb the small amount of fuel escaping as the fuel feed line connection to the fuel rail inlet pipe is released at the back of the engine using two spanners.
   Fit test hose T000T1083 between the feed line and fuel rail inlet pipe.

3. Connect fuel pressure gauge T000T0899 to the adaptor in the test hose. Bleed the gauge during the two second period for which the pump runs after switching on the ignition. Repeat as necessary, noting that the ignition must be switched off for five seconds before the pump will again run for two seconds after switch on.

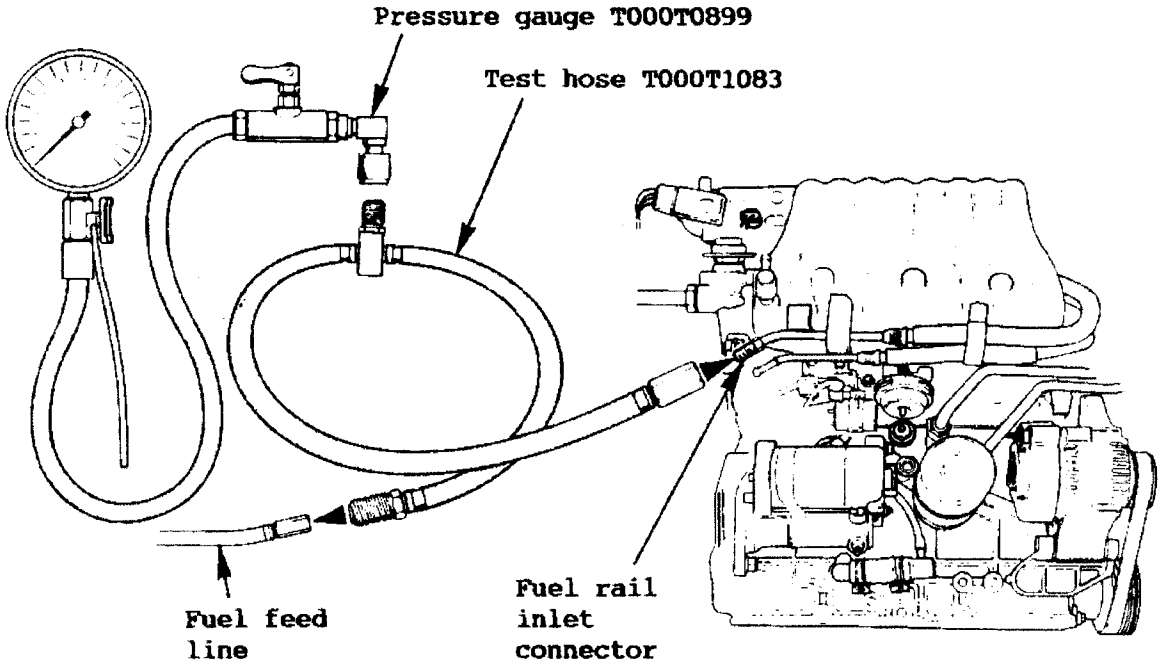

into the tank aperture and smear the inside surface with engine oil before fitting the pump assembly and retaining with the threaded ring. Ensure the pump is orientated as shown before tightening the ring as fully as possible by hand. Mark the position of the ring, and use a hardwood or plastic drift and a mallet to further tighten the ring a ¼ turn. Recheck orientation after tightening.

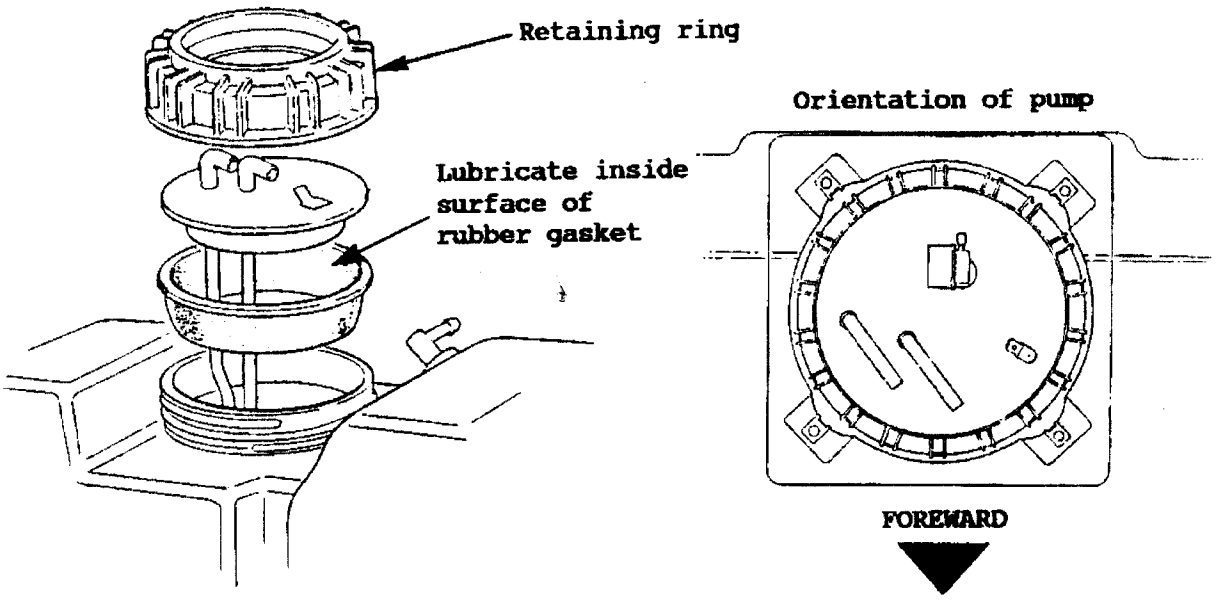

2. Push on the fuel feed and return pipes, mate the electrical connector plug, and connect the earth lead.

3. Refit the fuel pump access panel and roof stowage compartment floor.

EMK.3 - K FUEL RAIL, PRESSURE REGULATOR & INJECTORS

The system operates, with the engine running, in an acceptable pressure range of 211 - 379 kPa (30.5 - 55 lb/sq.in) depending on engine conditions. If the pressure is too low, poor performance could result. If the pressure is too high, poor idle quality could result. Check CO emissions and potentiometer adjustment. Chart EMK.4 - 5 and EMK.4 - 7 should be used to diagnose fuel pressure irregularities.

Important: When servicing any part of the fuel rail assembly, take care to prevent dirt and other contaminants from entering the fuel passages. Fittings should be capped, and holes plugged during servicing.

Fuel Rail & Injectors

Before removing the fuel rail assembly, it is recommended to use a spray type engine cleaner such as AC Delco X-30A following package instructions to help prevent dirt ingress into the open ports of the assembly.

1. **WARNING:** Relieve system fuel pressure as detailed in section EMK.3 - I.

2. Use an airline to blow any dirt from around the injectors, and disconnect the electrical plug from each injector. If necessary, use an open ended 14 mm spanner as a lever to release the injector connector plugs.

3. Release the pressure sensing hose from the top of the regulator valve. Using a back up wrench to prevent the fuel rail outlet from turning, release the fuel return pipe from the right hand end of the rail. Use a shop towel to absorb any escaping fuel.

4. Pull off the clips securing each injector to the fuel rail, and remove the two bolts securing the rail to the manifold. Carefully push the rail off the injectors, whilst holding the injectors in the manifold. Remove the injectors from the manifold.

   Caution: Take care to prevent damage to the injector electrical connector sockets and injector spray tips. Each fuel injector is serviced only as a complete assembly, and since it is an electrical component, must not be immersed in any cleanser.

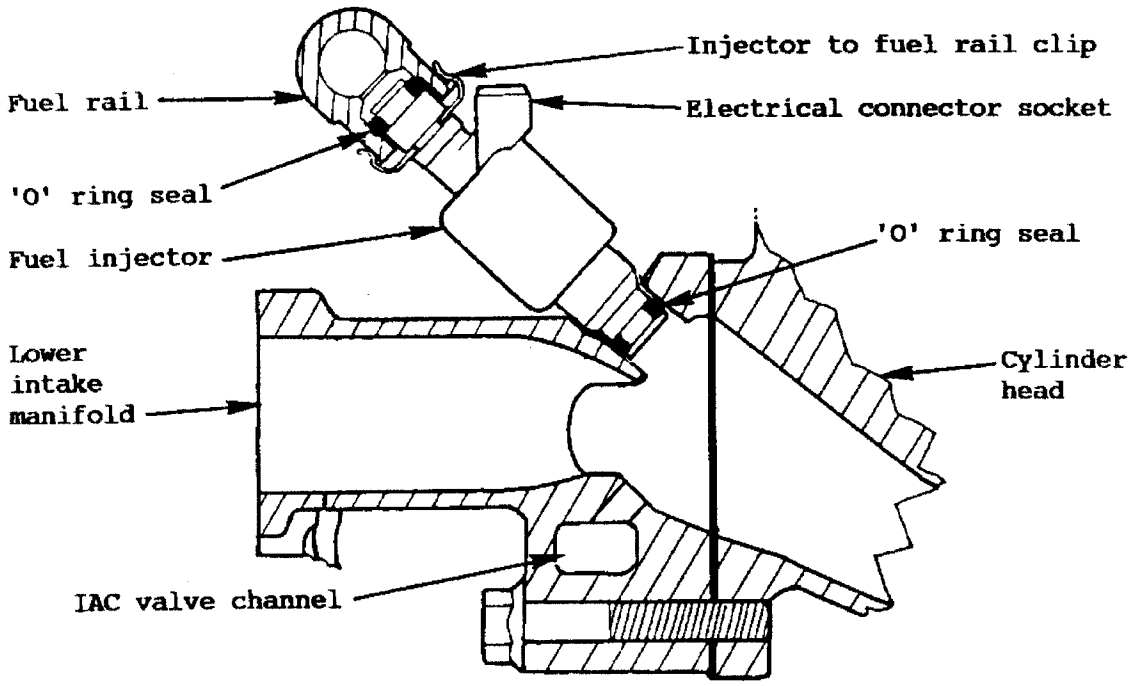

5. To remove the fuel rail, use a back up wrench to prevent the fuel rail inlet connector from turning, and release the fuel inlet pipe from the rail. Use an absorbent cloth to soak up any escaping fuel. If necessary, remove the cam cover for improved access. Withdraw the rail and pressure regulator valve assembly.
   Note: Do not attempt to remove the fuel inlet adaptor from the front end of the rail, since it is retained by staking of the rail end.

6. Before re-assembly, fit new 'O' rings to the top and bottom of each injector and lubricate with red silicone rubber grease. Fit new injector retaining clips to each injector. Renew the fuel rail inlet connection 'O' ring and lubricate with rubber grease.

7. Feed the fuel rail into position, and connect the fuel inlet pipe using a back up wrench to prevent the inlet connection turning whilst torque tightening to 30 Nm (22 lbf.ft).

8. Carefully fit the four injectors into the fuel rail, and check that each

retaining clip is fully engaged in its machined slot. Position the electrical connectors uppermost. Carefully fit the four injectors into their inlet manifold bores, and press in until the rail fixing holes are aligned with those in the manifold. Fit and tighten the two bolts.

9. Connect the fuel return and pressure sensor lines to the pressure regulator.

10. Plug in each fuel injector electrical connector. Energise the fuel pump and check for leaks.

Pressure Regulator

Check using chart EMK.4 - 7. The valve may be removed with the fuel rail 'in situ', but **first carry out the 'Fuel Pressure Relief Procedure' in EMK.3 - I.**

Disconnect the fuel return pipe and pressure sensing hose. Remove the single Torx screw retaining the valve and carefully withdraw the valve from the rail.

Before replacing the valve assembly, renew the sealing ring on the valve spigot, and lubricate with silicone rubber grease. Carefully push the valve spigot into the fuel rail, and retain with the fixing screw.

Injector Balance Test

The injector balance tester is a tool contained within the fuel injection diagnostic kit T000T0899 which is used to turn an injector on for a precise period of time, thus spraying a measured amount of fuel into the manifold. This causes a drop in fuel rail pressure which can be recorded and compared between each injector. Any injector with a pressure drop that is 10kPa (or more) greater or less than the average drop of the other injectors should be considered faulty and replaced.

1. Allow an engine cool down period of 10 minutes to avoid irregular readings due to 'hot soak' fuel boiling.

2. **WARNING:** Relieve system fuel pressure as detailed in section EMK.3 - I.

3. Use a shop towel for protection from any residual fuel pressure, and to absorb the small amount of fuel escaping as the fuel feed line connection to the fuel rail inlet pipe is released at the back of the engine using two spanners.
   Fit test hose T000T1083 between the feed line and fuel rail inlet pipe.

4. Connect fuel pressure gauge T000T0899 to the adaptor in the test hose. Bleed the gauge during the two second period for which the pump runs after switching on the ignition. Repeat as necessary, noting that the ignition must be switched off for five seconds before the pump will again run for two seconds after switch on.

5. Switch ignition off for at least 10 seconds to complete ECM shutdown cycle. Connect injector tester (part of kit T000T0899) to no.1 injector.

6. Turn on ignition, and record steady fuel pressure reading. (If reading is not steady, refer to chart EMK.4 - 7.)

7. Energise the tester once, and note pressure drop at lowest point (disregard any slight pressure increase after drop hits low point). By subtracting this second pressure reading from the initial pressure, the individual pressure drop may be calculated.

8. Transfer the tester to the other injectors in turn and repeat step 7 recording the readings. Good injectors will record virtually the same pressure drop. Retest any injector that has a pressure difference of 10 kPa from the average of the other 3 injectors. Replace any injector that fails the retest.

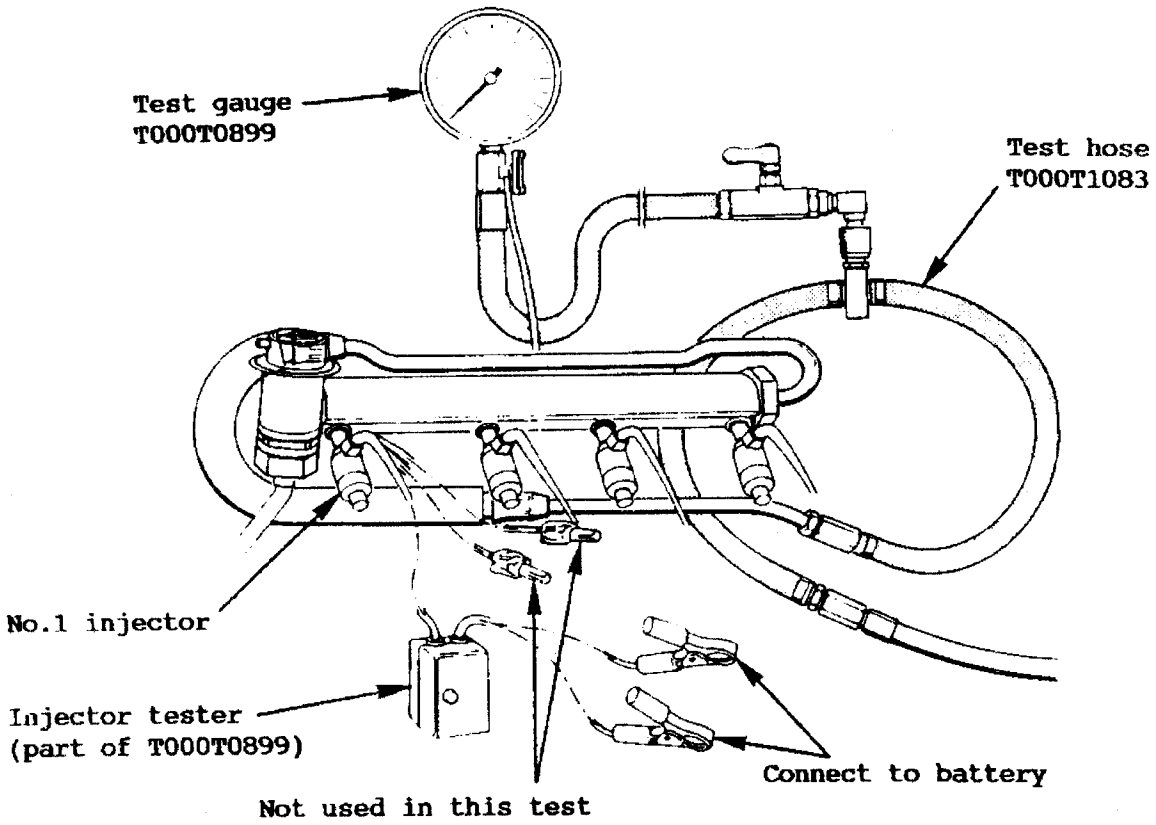

CAUTION: The entire test should not be repeated more than once without running the engine to prevent flooding. (This includes any retest on faulty injectors.)

EMK.3 - L SECONDARY THROTTLE VALVE CONTROL

The system consists of the four throttle valves mounted in the lower intake manifold, a vacuum operated actuator with reservoir, a vacuum solenoid valve, and a control circuit within the ECM.

Test Description: Numbers below refer to underlined numbers on the diagnostic chart.

1. If sufficient vacuum is not available at the solenoid valve, the system will not function correctly.
2. With the ignition 'on' and the engine not running, the solenoid should be de-energised and closed. Vacuum should not be able to pass to the actuator.
3. With the diagnostic terminal grounded, the ECM should ground the control circuit to energise the solenoid and allow vacuum to pass to the actuator.
4. This step checks the ability of the actuator to move the linkage.
5. This step, and the following steps, checks for circuit continuity.

Diagnostic Chart - Secondary Throttle

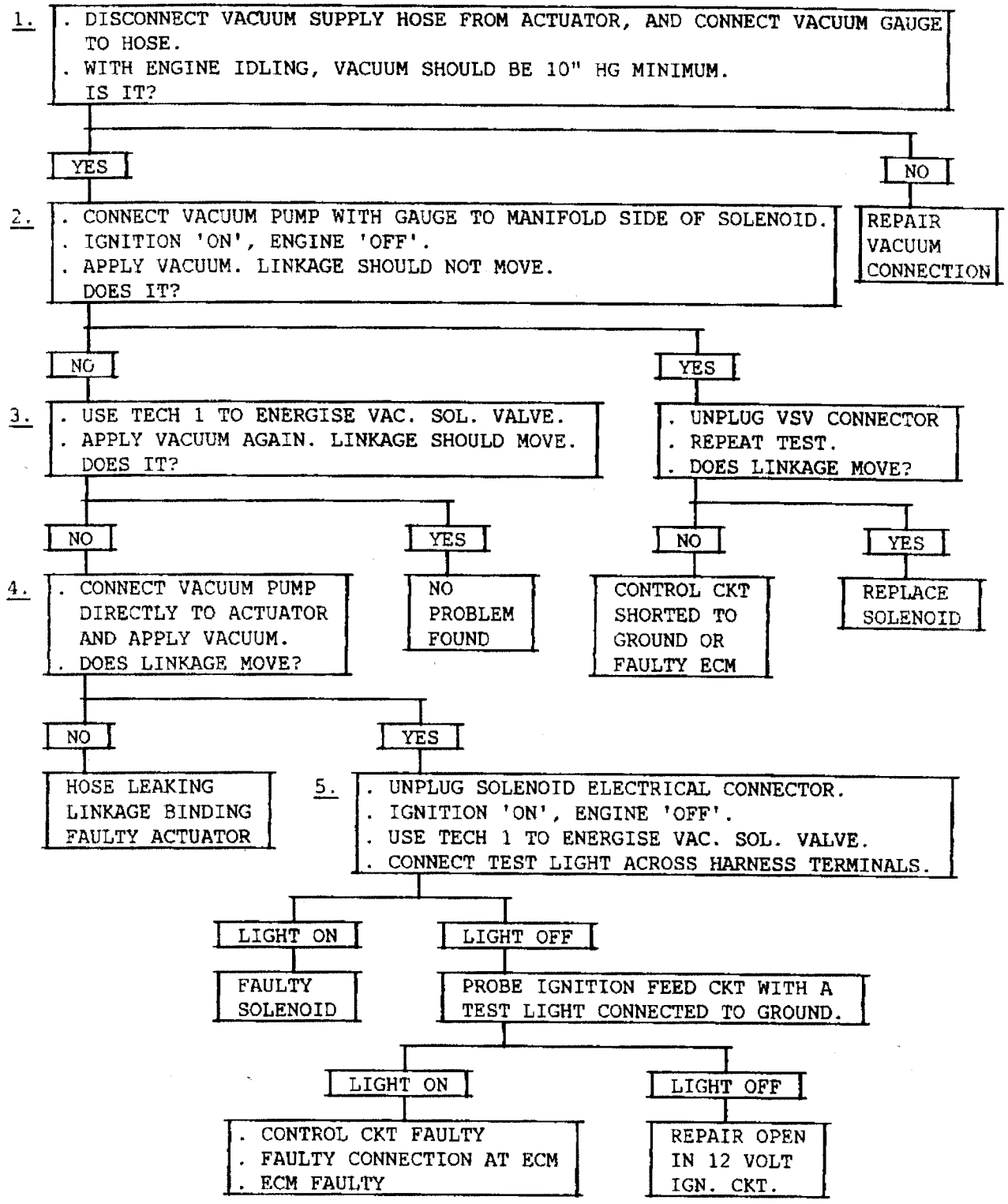

Secondary Throttle Schematic Diagram

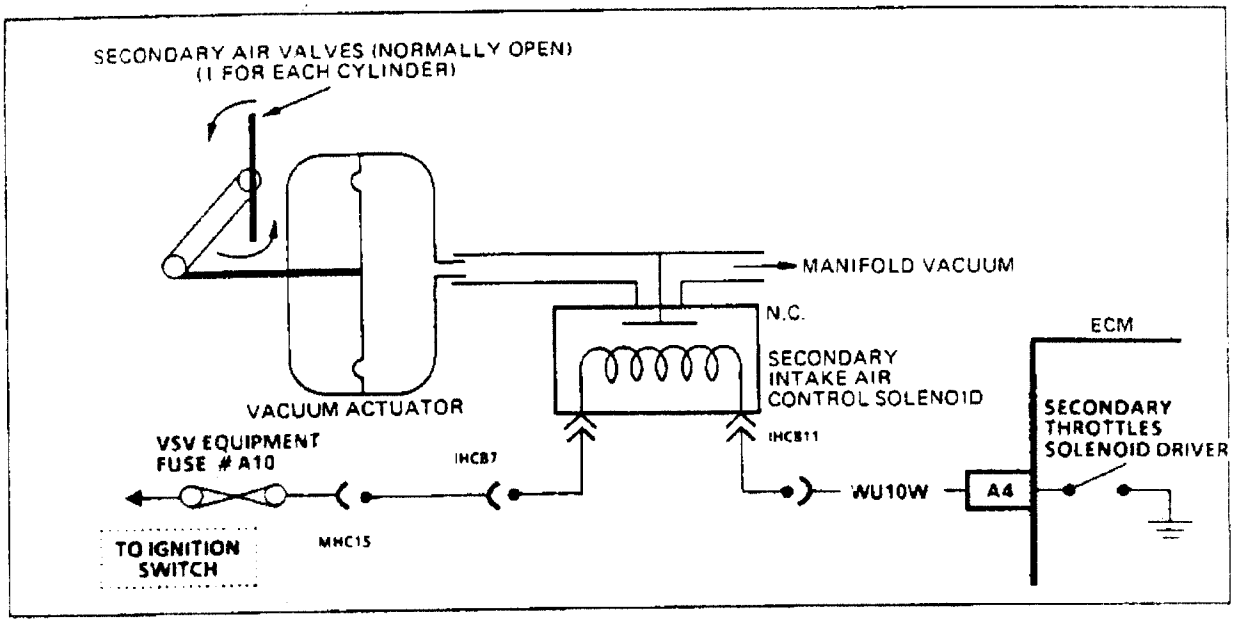

EMK.3 - M IDLE AIR CONTROL (IAC) VALVE

A 'Tech 1' scanner tool will display idle air control (IAC) valve position in 'Counts' or steps. '3' steps indicates that the electronic control module (ECM) is commanding the IAC valve to be fully extended to a fully seated position. This condition is usually caused by a vacuum leak. The higher the number of counts, the more air is being allowed to pass the IAC valve. If the IAC valve is unable to control the idle speed within calibrated limits, chart EMK.4 - 9 (in section EMK.4) should be used to diagnose the IAC system. Refer to 'Rough, Unstable, or Incorrect Idle, Stalling' in the Symptoms Section EMK.6 for other possibilities of the cause of idle problems.

The throttle by-pass screw on the throttle body is pre-set at the factory and should require no adjustment. If necessary however, the screw may be reset as follows:

1. Run engine to normal operating temperature and check that all electrical loads including the cooling fans and a/c are off. Power down the ECM (switch off ignition for at least 5 seconds) to reset the IAC valve.

2. Start engine and idle for 30 seconds. Enter field service mode (fit bridging plug T000T0909 or use 'Tech 1' tool), to set the IAC at the 20 count position.

3. Check ignition timing is 16° BTDC (see EMK.3 - N).

4. Remove the rubber plug from the top of the primary throttle body, and turn the throttle by-pass screw to adjust idle speed to 950 rpm.

5. Check tailpipe CO reading is ½ - 1½%. Adjust if necessary (see section EMK.3 - E), and recheck idle speed.

6. Stop engine, and power down ECM to reset IAC valve. Exit field service mode.

7. Restart engine and recheck tailpipe CO.

For schematic wiring diagram and diagnostic chart, refer to EMK.4 - 9 in section EMK.4.

To Remove

1. Release the electrical connector, remove the two retaining screws and withdraw the valve from the manifold.

2. Remove the mating spigot 'O' ring and discard.

Note: As the IAC valve is an electrical component, it must not be soaked in any liquid cleaner or solvent, or damage may result.

To Replace

The IAC valve used on the Elan has a dual taper pintle. Check that any replacement valve has the correct part number and pintle shape.

Before fitting a replacement IAC valve, the plunger should be fully retracted to ensure that no damage is caused to the valve during installation:

1. Carefully press the plunger inwards whilst 'wiggling' from side to side until fully retracted. If too much force is applied to the pintle, the worm drive mechanism may be damaged.

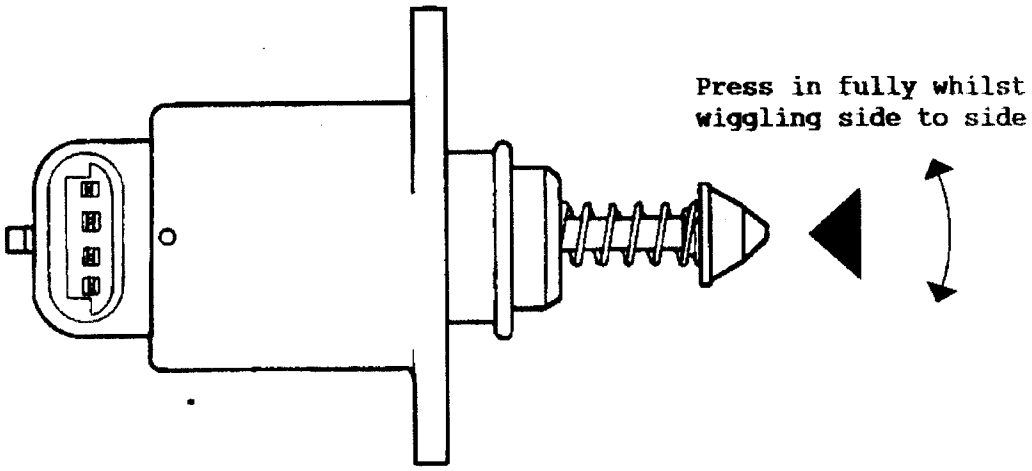

2. Fit a new IAC valve 'O' ring and lubricate with engine oil.

3. Clean the IAC valve sealing surfaces on the manifold and fit the valve in position. Fit and tighten the two retaining screws to 3.4 Nm (30 lbf.in).

4. Refit electrical connector, switch on the ignition and then switch off again. This will cause the ECM to carry out an IAC valve reset, and park at 80 counts. If this is not done, the idle speed will be incorrect on initial start up, until the IAC position is relearnt.

EMK.3 - N DIRECT IGNITION

The ECM uses information from the MAP and coolant sensors in addition to rpm to calculate spark advance as follows:

- Low MAP Output Voltage = More spark advance
- Cold engine = More spark advance
- High MAP Output Voltage = Less spark advance
- Hot engine = Less spark advance

Therefore, detonation could be caused by low MAP output or high resistance in the coolant sensor circuit.

Poor performance could be caused by high MAP output or low resistance in the coolant sensor circuit.

If the engine cranks but will not run or immediately stalls, CHART EMK.4 - 3 must be used to determine if the failure is in the DI system or the fuel system.

If the symptom is engine miss and the DI system is suspected, the following diagnostic chart should be used.

Code 42: If Code 42 is set, the code chart in section EMK.4 must be used for diagnosis. If the symptom is 'Engine Misses' and the ignition system is suspected, the following diagnostic chart should be used.

Code 41: Code 41 is set if the engine speed signal is not received by the ECM. Refer to the trouble code chart in section EMK.4.

Setting Timing

The base ignition timing is set by altering the position of the magnetic pick-up reletive to the reluctor wheel, by rotating the cam angle sensor housing.

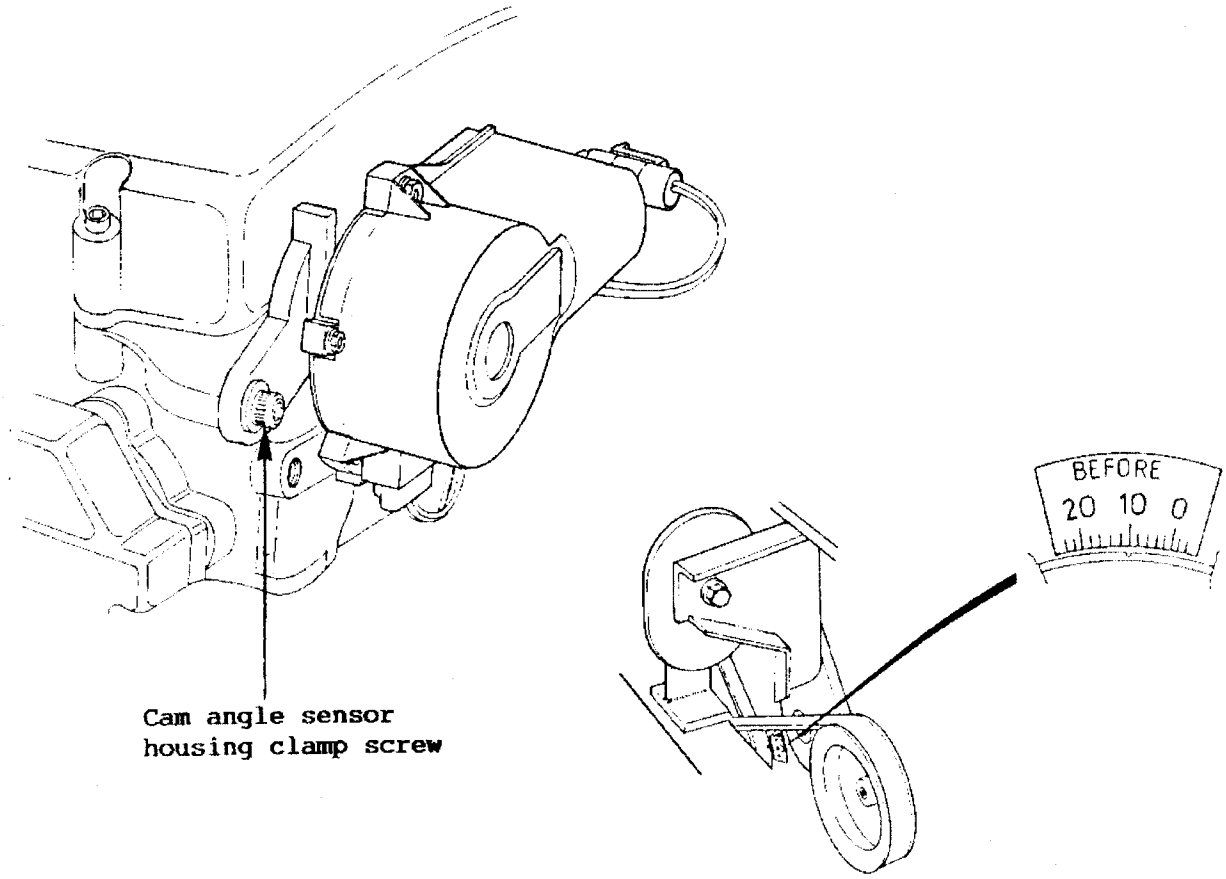

1. The engine should be running at idle, at normal running temperature (cooling fans cycled on and off) with the air conditioning and all ancillary equipment (inc. cooling fans) switched off;

2. Fit the bridging plug T000T0909 into the ALDL connector ('Check Engine' light will flash), or use the 'Tech 1' tool to enter field service mode.

3. Slowly raise engine speed over 2,000 rpm, and return to idle slowly to reset the IAC valve at the 20 count position.

4. Connect a stroboscopic timing light to no.1 spark plug lead, and using the timing marks on the front pulley, note the base ignition timing.
   Specification = 16° BTDC
   If necessary, slacken the cam angle sensor housing clamp bolt, and rotate the housing as required to achieve specification. Tighten the clamp bolt to 24 Nm (17 lbf.ft).

D.I. System Circuit

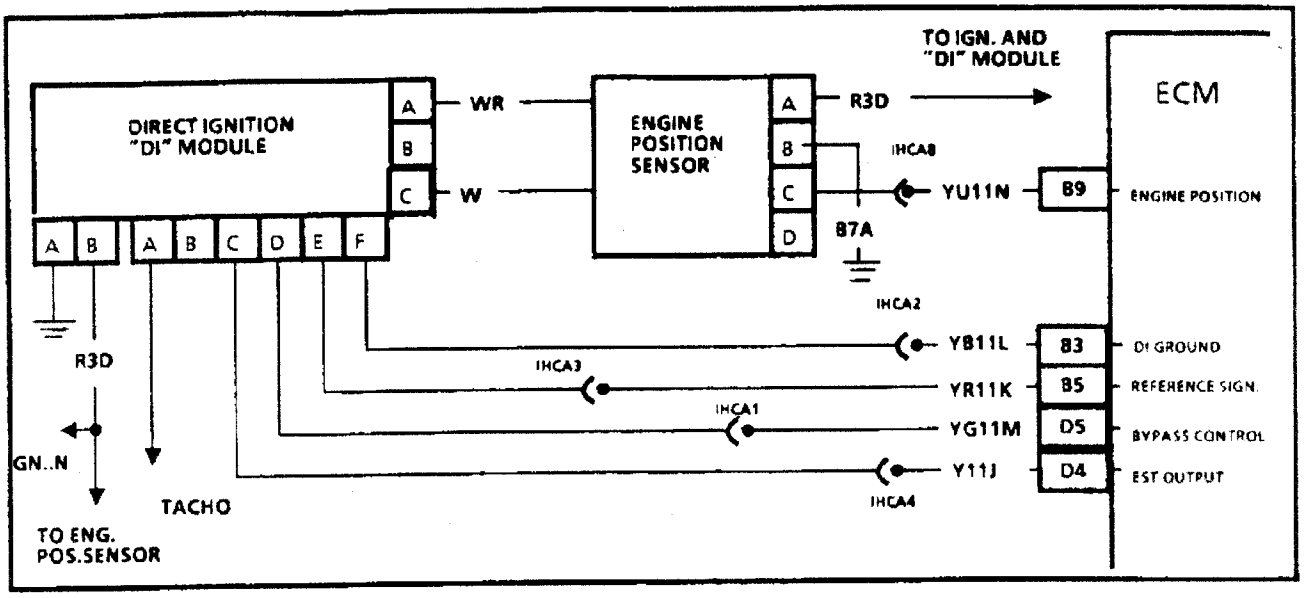

Test Description: Numbers below refer to underlined numbers on the diagnostic chart.

1. This checks for equal relative power output between the cylinders. Any injector, which when disconnected did not result in an rpm drop approximately equal to the others, is located on the misfiring cylinder.
2. If a plug lead is faulty, the other plug on that coil may still fire at idle. This step tests the system's ability to produce at least 25,000 volts at each spark plug.
3. Check for ignition voltage feed to injector and for an open injector driver circuit.
4. An injector driver circuit shorted to ground would result in the test light 'ON' steady, and possibly a flooded condition which could damage engine. A shorted injector (less than 2 ohms) could cause incorrect ECM operation.

Diagnostic Chart - EST

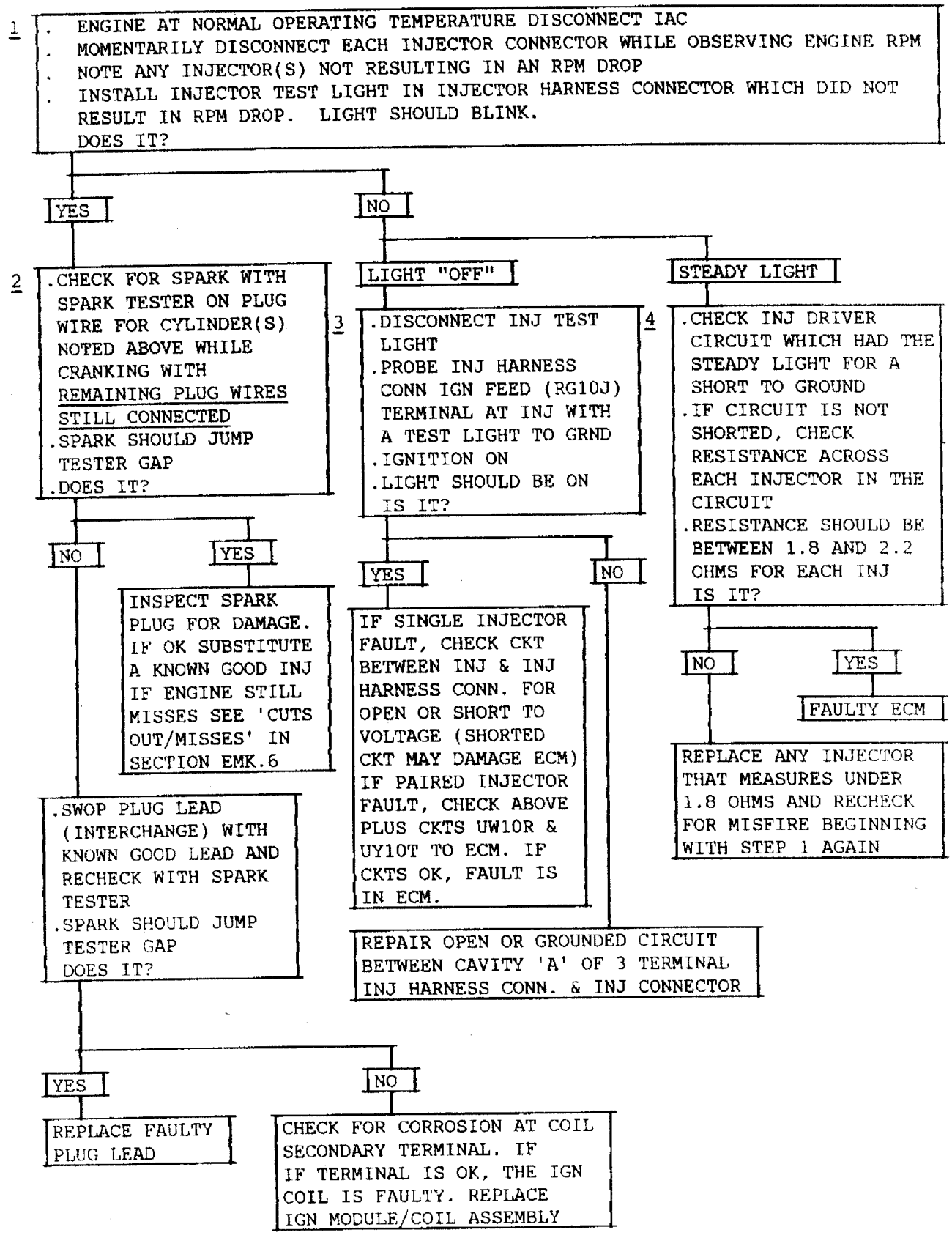

EMK.3 - O CAM ANGLE SENSOR

The cam angle sensor, mounted on the left hand end of the cylinder head, contains the injector timing Hall effect sensor, and the ignition timing/engine speed magnetic sensor.

To replace the complete cam angle sensor assembly, unplug the harness connector from each sensor, remove the single base housing clamping bolt, and withdraw the assembly from the cylinder head. On refitting, engage the drive tongue on the sensor with the offset slot in the end of the exhaust camshaft, adjust the base ignition timing as above, and tighten the clamp screw to 24 Nm (17 lbf.ft).

EMK.3 - P IGNITION MODULE & HT COILS

The ignition module and the two high tension coils are assembled as a sealed unit which is serviced only as a complete assembly. If any of these components are diagnosed as being faulty, (see section EMK.3 - N) the complete assembly must be replaced.

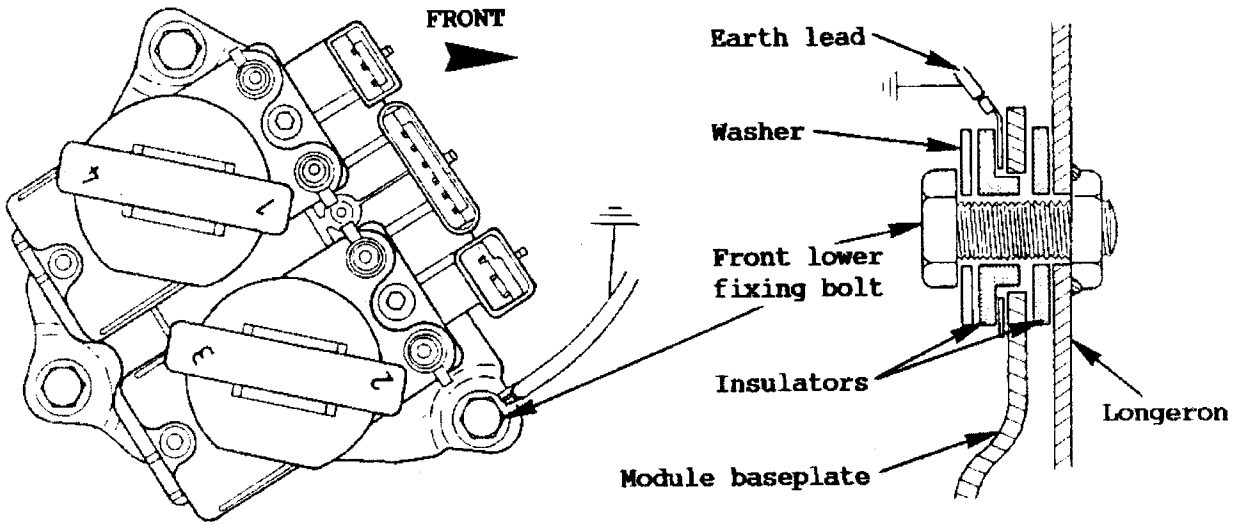

The assembly is mounted on a baseplate, itself secured to the chassis left hand front longeron, at the left hand side of the engine bay with 3 fixing bolts and insulated spacers. A separate lead is used to earth the baseplate. To remove the unit, disconnect the 4 spark plug leads and the 3 harness connector sockets, release the 3 fixing bolts and withdraw the assembly from the car.

EMK.3 - Q ELECTRONIC SPARK TIMING (EST)

The following is a brief description of each of the EST circuits:

- Reference Signal Input Circuit YR11K
  The cam angle sensor generates a signal to the ignition module which results in a reference pulse (square wave signal) being sent to the ECM. The ECM uses this signal to calculate crankshaft position, engine speed, and injector pulse width. The engine will not start or run if this circuit is open or grounded.

Reference Ground - Circuit YB11L
This wire is grounded through the module and insures that the ground circuit has no voltage drop between the ignition module and the ECM which could affect performance.

Bypass - Circuit YG11M
While the engine is being cranked, the ignition module controls spark timing. This is known as bypass timing mode because the ignition module 'bypasses' the ECM. When the engine reaches 800 rpm, the ECM applies 5 volts to the bypass circuit which switches spark timing control from the ignition module to ECM controlled electronic spark timing (EST). This switching action also changes the resistance on the EST circuit, through the module to the ground, as noted in the EST circuit description. If the bypass circuit is open or shorted to ground, a code 42 will be set, and the ignition module will operate in bypass timing mode. Bypass timing may cause poor performance and reduced fuel economy, and the 'Check Engine' light will be 'ON', except as noted in the EST circuit description.

EST - Circuit Y11J
The ECM sends the electronic spark timing (EST) pulses to the ignition module on this circuit, and also monitors these pulses. This signal is similar to the ignition reference pulse square wave except that the ECM uses sensor inputs to determine the pulse timing to control spark advance. When the engine is below 800 rpm, the ignition module controls spark timing (operating bypass mode), and does not use the EST pulses.
The resistance to ground from the EST input through the ignition module is less than 500 ohms in bypass mode, resulting in lower EST pulse voltage. When the engine reaches 800 rpm, the 5 volt signal on the bypass circuit switches the ignition module to EST mode. The resistance to ground through the ignition module from the EST input increases to over 8000 ohms, resulting in a higher EST pulse voltage.
If the EST circuit is grounded, the EST pulse voltage will remain low after the 5 volt bypass signal is applied (above 800 rpm), causing Code 42 to be set. The engine will continue running in bypass mode with the 'Check Engine' light 'ON'.
If the EST circuit is grounded after the engine is running, the ignition module will switch itself back to bypass timing after it sends a certain number of reference pulses to the ECM with no corresponding return of EST pulses. The engine will continue running if rpm is high enough and load is low enough, with Code 42 set and the 'Check Engine' light 'ON'.
An open or grounded bypass circuit will have an effect on the EST pulse voltage similar to a grounded EST circuit. The ignition module will not receive the 5 volt bypass signal and will remain in or return to bypass mode. The low resistance to ground in bypass mode will result in lower EST pulse voltage, causing Code 42 to set and the 'Check Engine' light to be 'ON'. An open EST circuit is only recognised by the ECM when the engine is cranking, because the EST pulse voltage is expected to be low at that time, due to the low resistance through the ignition module. With an open EST circuit, the pulse voltage will be high while cranking. Code 42 will be set, the ignition module will operate in bypass mode, and the 'Check Engine' light will be 'ON'.
If the EST circuit opens after the engine is running, the ignition module will switch itself back to bypass mode after it sends a certain number of reference pulses with no corresponding return of EST pulses. The ignition module will operate in bypass mode and the engine will remain running if rpm is high enough and load is low enough. However, the EST pulse voltage will

remain high, as expected, and the ECM will not recognise the open EST circuit. The 'Check Engine' light will remain 'OFF', although bypass timing may result in poor performance and reduced fuel economy. The ECM will recognize the open EST circuit the next time the engine is cranked.

EMK.3 - R ELECTRONIC SPARK CONTROL (ESC)

The 'Tech 1' tool has two positions to help diagnose a problem in this circuit. 'Knock signal' is used to monitor the input signal from the knock sensor. In this position, a 'YES' is displayed when knock is being detected and a 'NO' when it is not. 'Knock Retard' displays how much the ECM is retarding spark timing in crankshaft degrees.

Circuit Description

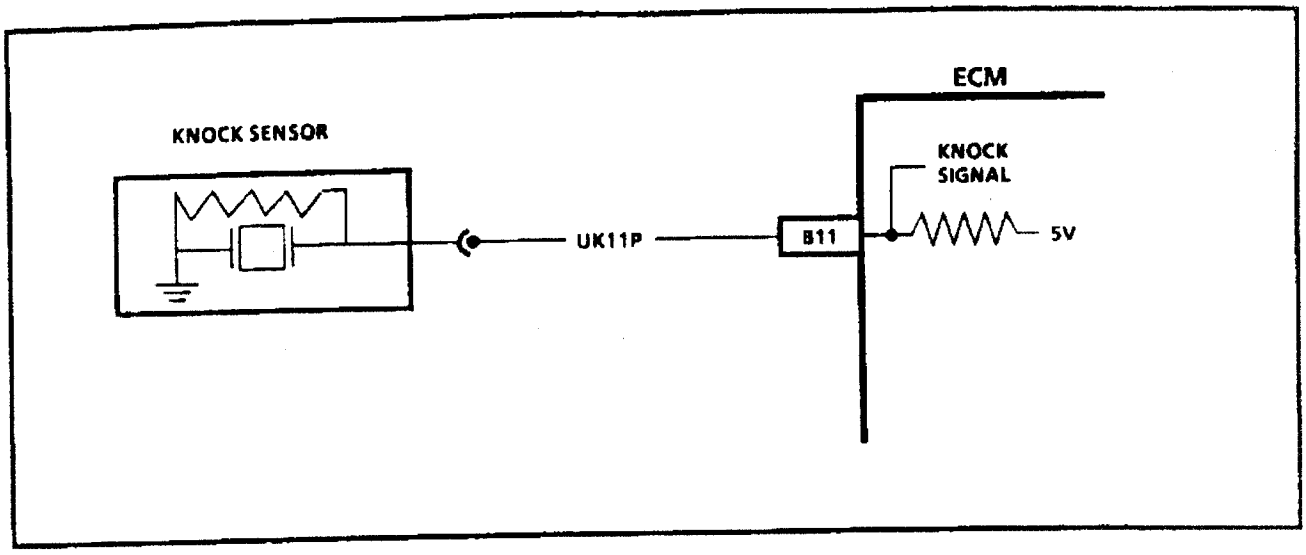

The knock sensor is used to detect engine detonation and the ECM will retard the electronic spark timing based on the signal being received. The circuitry within the knock sensor causes the ECM's 5 volts to be pulled down so that Circuit UK11P would measure about 2.5 volts. The knock sensor produces an AC signal which rides on the 2.5 volts DC voltage. The amplitude and frequency are dependent upon the knock level. The ESC portion of the Mem-Cal then sends a signal to other parts of the ECM which adjust the spark timing to reduce detonation.

Test Description: Numbers below refer to underlined numbers on the diagnostic chart.

1. With engine idling, there should not be a knock signal present at the ECM because detonation is not likely under a no load condition.
2. Tapping on the oil filter base casting should simulate a knock signal to determine if the sensor is capable of detecting detonation.
3. If the engine has an internal problem which is creating a knock, the knock sensor may be responding to the internal failure.
4. This test determines if the knock sensor is faulty or if the ESC portion of the ECM/Mem-Cal is faulty.

Diagnostic Chart - Knock Sensor

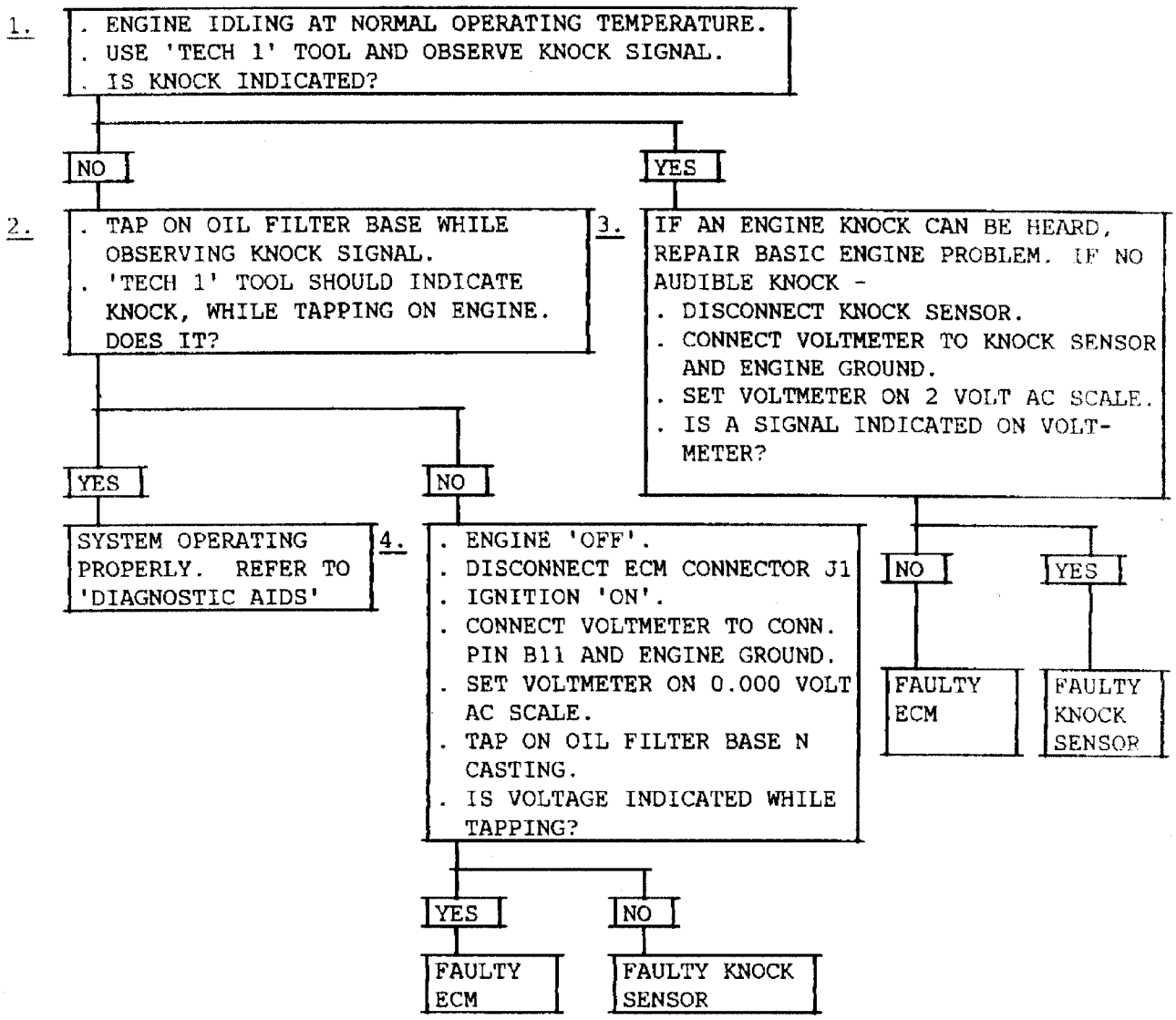

Diagnostic Aids

While observing 'knock signal' on the 'Tech 1' tool, there should be a 'YES' display when detonation can be heard. Detonation is most likely to occur under high engine load conditions.

Knock Sensor Replacement

The knock sensor is fitted into the RH side of the engine block. To remove the sensor, release the electrical connector and unscrew sensor from block.

When refitting, note that the sensor uses a taper thread, and should be fitted DRY to a torque tightness of 17 - 21 Nm (13 - 15 lbf.ft).

EMK.3 - S POSITIVE CRANKCASE VENTILATION

If the PCV valve is stuck closed, or the hose blocked, the following symptoms could be caused:

- rough idle
- stalling or slow idle speed
- oil leaks
- oil in air cleaner
- sludge in engine

A leaking valve or hose could cause:

- rough idle
- stalling
- high idle speed

Functional check of PCV valve

To check the correct operation of the valve:

1. Remove the valve from the cam cover, but leave attached to the hose.
2. Run the engine at idle.
3. Place a thumb over the end of the valve to check for vacuum. If no vacuum can be detected, check the hose for blockage, and replace the valve if necessary.
4. Stop engine and remove the valve. Shake the valve and listen for the rattle of the check needle. Blow down the plenum end of the valve to check that it seals.

With this system, any blow-by in excess of system capacity (from a badly worn engine, sustained heavy load etc.) is exhausted into the intake tract via the oil seperator. Check that there is no build up of oil in the seperator, and that oil is freely able to drain back into the sump.

Proper operation of the PCV system is dependent upon a sealed engine. If oil sludging or dilution is noted, and the PCV system is functioning correctly, check the engine for possible causes.

EMG.3 - T EXHAUST GAS RECIRCULATION (EGR)

The EGR system consists of an EGR diaphragm valve, a controlling vacuum solenoid valve, the connecting pipework and the control circuitry within the ECM. The ECM energises (opens) the solenoid valve to turn on EGR, when coolant temperature is above 30°C, TPS above idle, rpm above 1,000, and MAP indicating the engine is under load.

Too much EGR flow tends to weaken combustion, causing the engine to run roughly or stop. With too much EGR flow at idle, cruise, or cold operation, any of the following conditions may occur:

- engine stops after cold start.
- engine stalls after deceleration.
- car surges during cruise.
- rough idle. If the EGR valve is stuck open, the engine may not idle.

Knock Sensor Replacement

The knock sensor is fitted into the RH side of the engine block. To remove the sensor, release the electrical connector and unscrew sensor from block.

When refitting, note that the sensor uses a taper thread, and should be fitted DRY to a torque tightness of 17 - 21 Nm (13 - 15 lbf.ft).

EMK.3 - S POSITIVE CRANKCASE VENTILATION

If the PCV valve is stuck closed, or the hose blocked, the following symptoms could be caused:

- rough idle
- stalling or slow idle speed
- oil leaks
- oil in air cleaner
- sludge in engine

A leaking valve or hose could cause:

- rough idle
- stalling
- high idle speed

Functional check of PCV valve

To check the correct operation of the valve:

1. Remove the valve from the cam cover, but leave attached to the hose.
2. Run the engine at idle.
3. Place a thumb over the end of the valve to check for vacuum. If no vacuum can be detected, check the hose for blockage, and replace the valve if necessary.
4. Stop engine and remove the valve. Shake the valve and listen for the rattle of the check needle. Blow down the plenum end of the valve to check that it seals.

With this system, any blow-by in excess of system capacity (from a badly worn engine, sustained heavy load etc.) is exhausted into the intake tract via the oil seperator. Check that there is no build up of oil in the seperator, and that oil is freely able to drain back into the sump.

Proper operation of the PCV system is dependent upon a sealed engine. If oil sludging or dilution is noted, and the PCV system is functioning correctly, check the engine for possible causes.

EMG.3 - T EXHAUST GAS RECIRCULATION (EGR)

The EGR system consists of an EGR diaphragm valve, a controlling vacuum solenoid valve, the connecting pipework and the control circuitry within the ECM. The ECM energises (opens) the solenoid valve to turn on EGR, when coolant temperature is above 30°C, TPS above idle, rpm above 1,000, and MAP indicating the engine is under load.

Too much EGR flow tends to weaken combustion, causing the engine to run roughly or stop. With too much EGR flow at idle, cruise, or cold operation, any of the following conditions may occur:

- engine stops after cold start.
- engine stalls after deceleration.
- car surges during cruise.
- rough idle. If the EGR valve is stuck open, the engine may not idle.

Too little, or no EGR flow allows combustion temperatures to get too high during acceleration and high load conditions, which could cause:

- high emissions of NOx.

Circuit Diagram

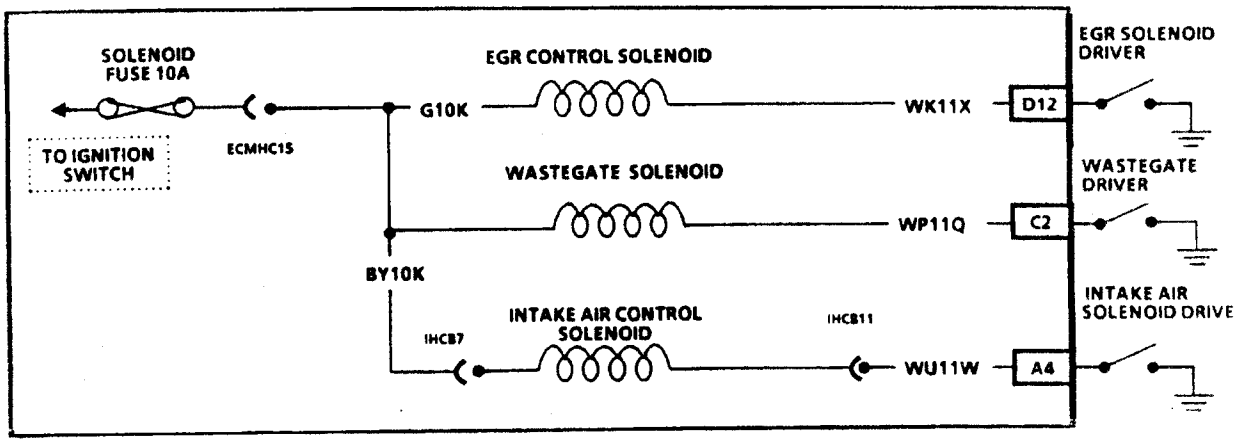

Test Description

Numbers below refer to underlined numbers on the diagnostic chart.

1. With ignition on and engine stopped, the vacuum solenoid valve should not be energised and vacuum should not pass to the EGR valve.
2. Grounding the ALDL diagnostic terminal will energise the solenoid and allow vacuum to pass to the valve.
3. When the VSV is de-energised, the vacuum in the EGR valve should bleed off through the vent.
4. Checks for blocked EGR passages. If the passages are blocked, the engine may have severe detonation on acceleration.

To Replace EGR Valve

- Disconnect the EGR pipe from the valve.
- Disconnect the vacuum pipe from the EGR capsule.
- Release the two valve fixing screws, and remove the valve from the plenum tract.

Refit the valve in the reverse order to removal, and torque tighten the EGR pipe to 45 Nm (33 lbf.ft).

Diagnostic chart overleaf -

Diagnostic Chart - EGR

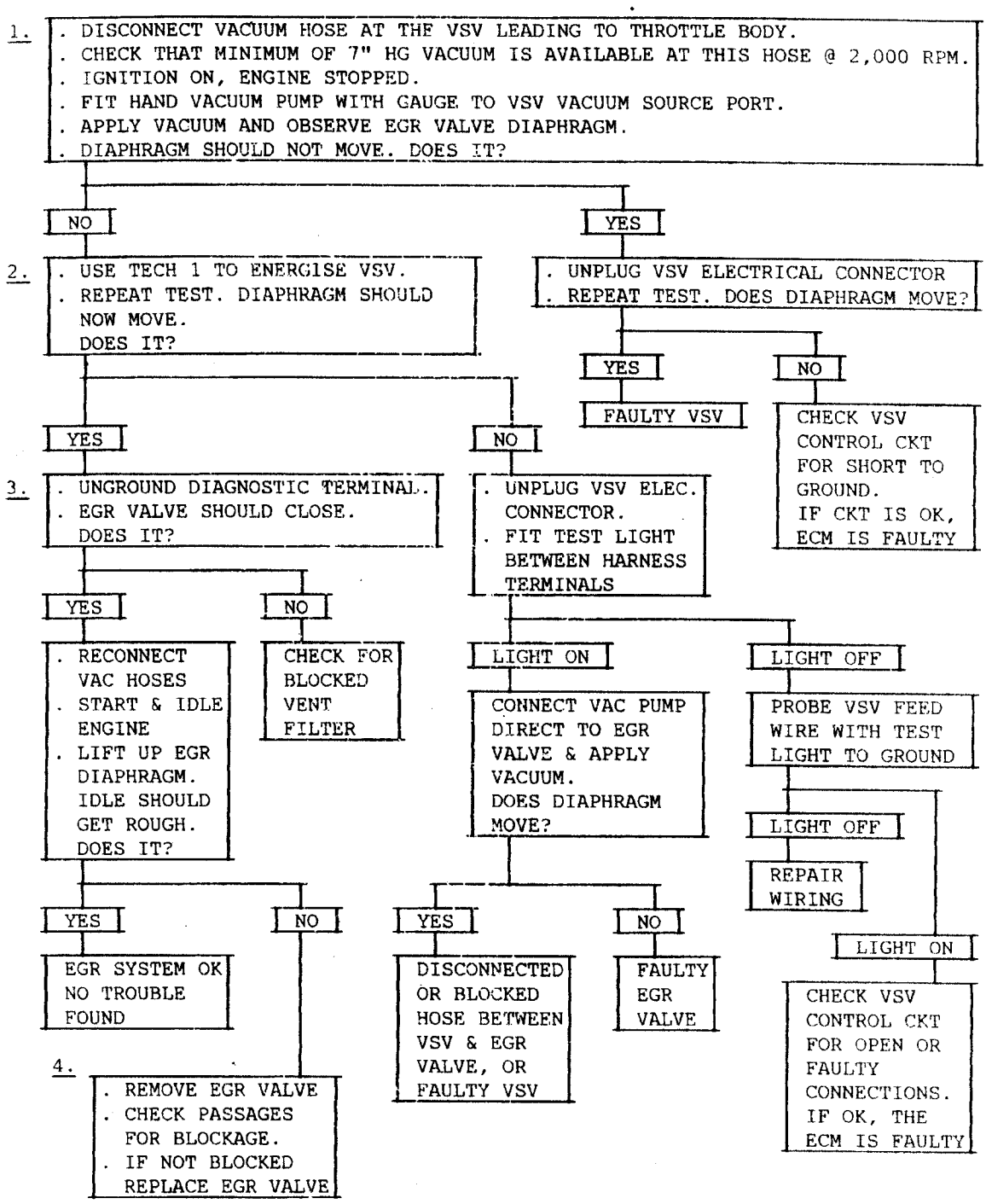

EMK.3 - U TURBO BOOST CONTROL

The pulse width modulated turbo boost control vacuum solenoid valve is fixed to the rear of the air filter mounting bracket.

At engine speeds below 2,900 rpm, the wastegate capsule control pressure line is intact (solenoid valve de-energised and closed), so that boost pressure is limited by the capsule to 0.41 bar. If higher boost pressures are recorded at these engine speeds:

- verify gauge accuracy;
- clamp off the VSV hose to check for valve or hose leakage;
- check the capsule diaphragm for rupture and the wastegate setting by the following procedure:

Tools Required:
- Dial gauge
- Attachment finger T000T1102
- Hand operated vacuum/pressure pump T000T0907
- 0 - 20 psi pressure gauge (e.g. Mityvac 6810B)

1. Remove the turbocharger heat shield by releasing the three fixing screws.

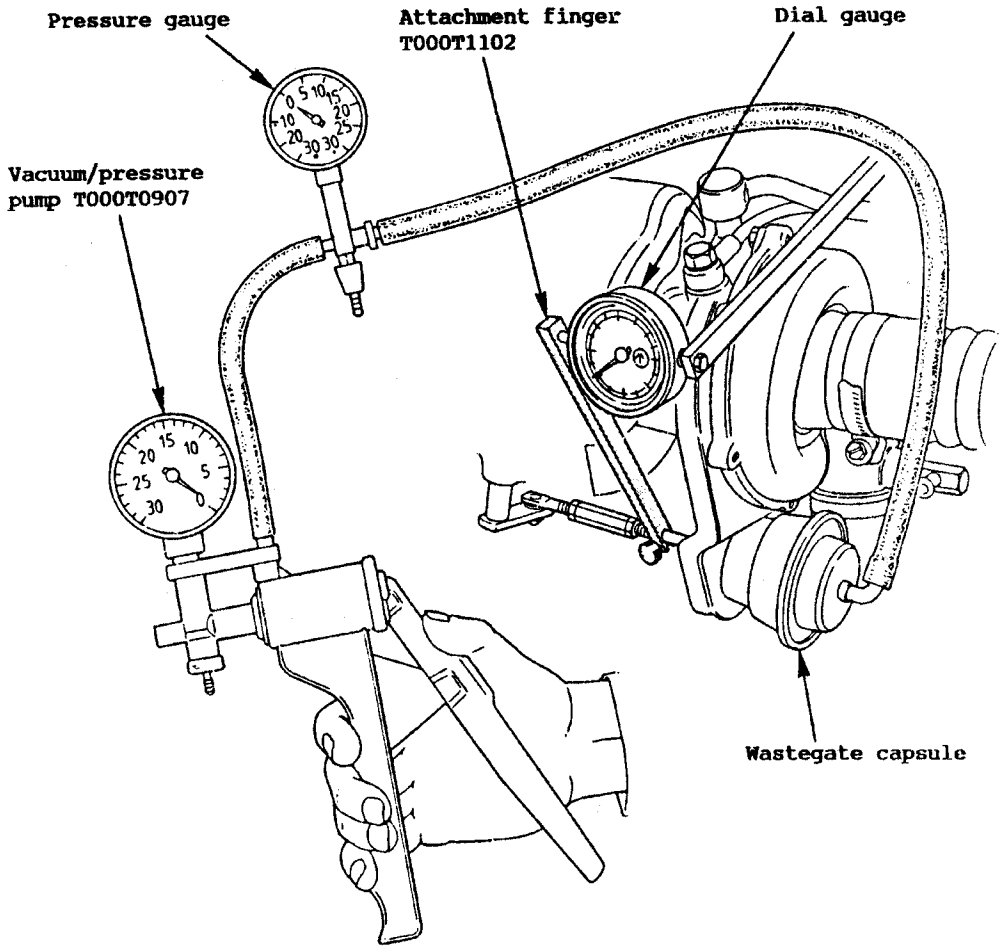

2. Fit the attachment finger T000T1102 to the capsule rod and tighten the fixing screw. Fix the dial gauge parallel to the capsule rod and abutting the finger. Zero the gauge.

3. Disconnect the capsule pressure hose, and connect the hand pump and a suitable pressure gauge to the capsule as shown in the diagram.

4. Use the hand pump to slowly increase pressure in the capsule, until the rod has moved 2 mm. Record the pressure reading.

   Specification:
   Pressure on rise to produce 2 mm rod movement = 9.8 - 10.2 psi.

   Note that as the pressure is increased, a small amount of creep may occur before 'crack off' when the rod starts to move rapidly. If the 2 mm point is overshot, release all pressure and begin again, as hysteresis in the system results in different readings for increasing and decreasing pressures.

5. If specification is not achieved, the control capsule and rod must be replaced:
   Release the actuator rod from the wastegate lever after removing the 'C' clip, and remove the three screws securing the capsule bracket to the turbocharger. Fit the new capsule and tighten the bracket fixings to 5 Nm. Retain the rod to the wastegate lever with the 'C' clip, and reconnect the pressure hose. Refit the heat shield.

If 0.41 bar cannot be achieved at engine speeds below 2,900 rpm, check the general engine condition, turbocharger and wastegate for damage. Check exhaust manifold and intake system for air leaks.

At engine speeds above 2,900 rpm with throttle openings over 25%, the solenoid valve pulse width is modulated to allow boost pressure to rise in proportion to throttle opening, up to a maximum of 0.65 bar at full throttle. If the maximum figure cannot be achieved, use the 'Tech 1' tool to check that the throttle position sensor is correctly adjusted (see section EMK.3 - F) and that 100% throttle opening can be achieved. If TPS adjustment is correct, ventilate the wastegate capsule line and drive the car to check boost pressure - but do not exceed the specified maximum. If 0.65 bar can now be achieved, the solenoid pipework may be blocked or restricted, or the solenoid valve or ECM may be faulty. If the specification cannot be achieved, check the general engine condition, and turbocharger for damage. Check exhaust manifold and intake system for air leaks.

Under wide open throttle transient conditions, a short duration of overboost may occur. As an engine safeguard, in case of a boost control system failure, the ECM will switch off the injectors if boost pressure in excess of 0.92 bar (13.5 lb/in^2) is detected for more than 0.5 second. All quoted pressures are approximate and at sea level.

Note that the ECM monitors boost pressure in **absolute** values via the MAP sensor, based on a barometric pressure reading taken at the instant of ignition switch on. If a significant change of altitude and/or atmospheric pressure occurs in one ignition cycle, the maximum readings seen on the boost gauge will be higher with a reduced atmospheric pressure (and vice-versa), until the ignition is turned off/on again.

EMK.3 - V VACUUM CONNECTION DIAGRAM

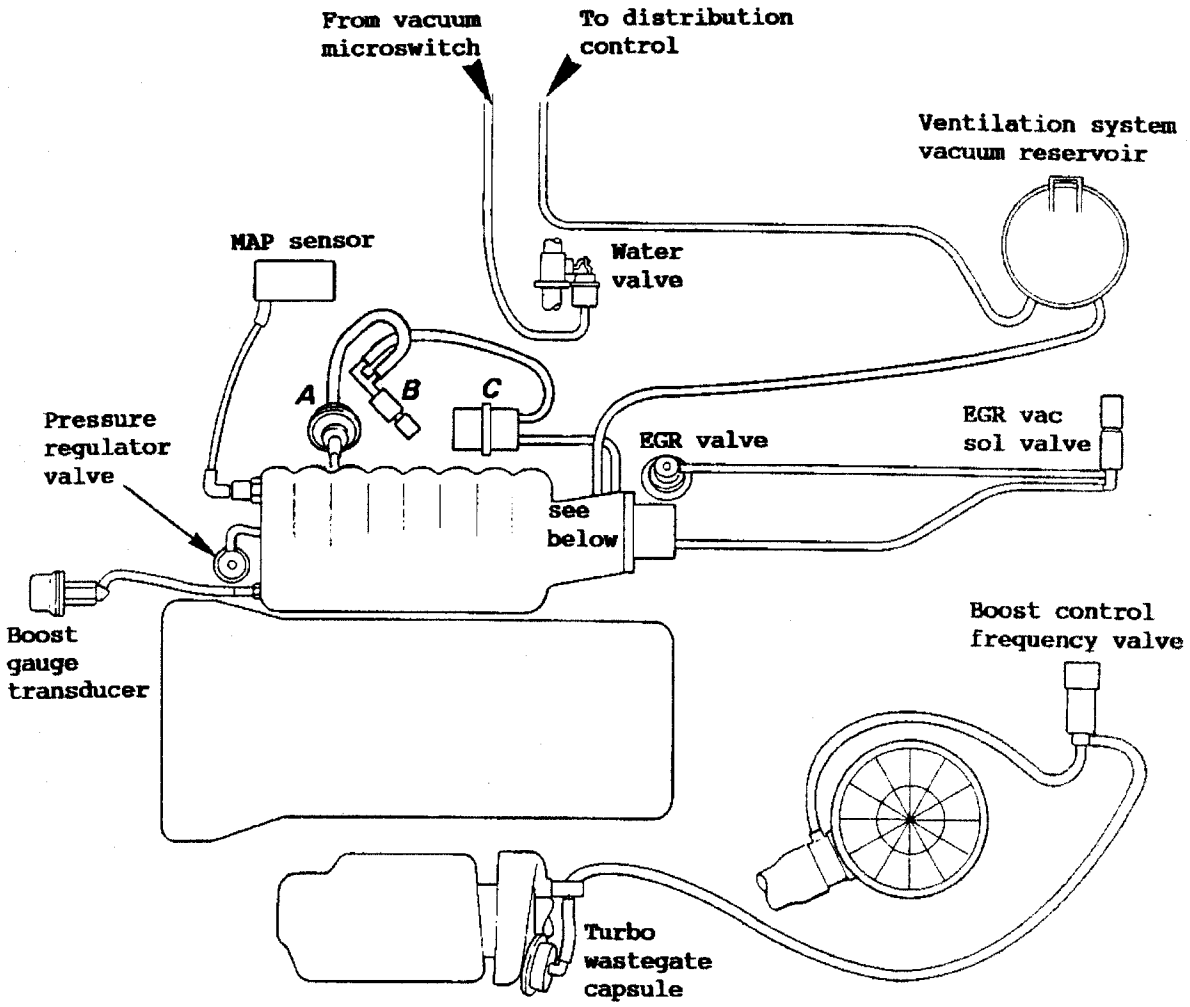

A - 2nd throttle actuator
B - 2nd throttle vac. sol. valve
C - 2nd throttle vac. reservoir

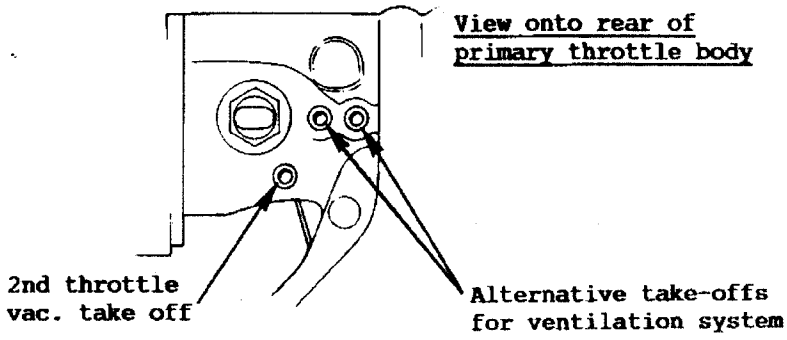

SECTION EMK.4

1.6L TURBO LOTUS ELAN

ENGINE COMPONENTS / WIRING DIAGRAMS / DIAGNOSTIC CHARTS

Component Locations - Figure EMK. 4-1 ..... Page EMK. 4- 2
Fuse & Relay Locations - Figure EMK. 4-2 ..... Page EMK. 4- 4
ECM Terminal End View - Figure EMK. 4-3 ..... Page EMK. 4- 6
Wiring harness Connector Face Views - Figure EMK. 4-4 ..... Page EMK. 4- 7
Wiring Diagrams ..... Page EMK. 4- 8
Diagnostic Circuit Check- Tech 1 Data ..... Page EMK. 4-11
No "Check Engine" Light - Chart EMK. 4-1 ..... Page EMK. 4-14
No ALDL or Won't Flash Code 12 ("Check Engine" Light on Steady) - Chart EMK. 4-2 .. Page EMK. 4-16
Engine Cranks But Won't Run - Chart EMK. 4-3 ..... Page EMK. 4-18
Fuel Pump Relay Circuit - Chart EMK. 4-5 ..... Page EMK. 4-24
Fuel Delivery System - Chart EMK. 4-7 ..... Page EMK. 4-26
Idle Speed Error - Chart EMK. 4-9 ..... Page EMK. 4-30
"SCAN" CODE CHARTS
Code 14 - Coolant Temperature Sensor Circuit (Signal Voltage Low - High Temperature Indicated) ..... Page EMK. 4-32
Code 15 - Coolant Temperature Sensor Circuit (Signal Voltage High - Low Temperature Indicated) ..... Page EMK. 4-34
Code 21 - Throttle Position Sensor (TPS) Circuit (Signal Voltage High) ..... Page EMK. 4-36
Code 22 - Throttle Position Sensor (TPS) Circuit (Signal Voltage Low) ..... Page EMK. 4-38
Code 23 - Manifold Air Temperature (MAT) Sensor Circuit (Low Temperature Indicated) ..... Page EMK. 4-40
Code 24 - Vehicle Speed Sensor (VSS) Circuit ..... Page EMK. 4-42
Code 25 - Manifold Air Temperature (MAT) Sensor Circuit (High Temperature Indicated) ..... Page EMK. 4-44
Code 31/33 - MAP Sensor Circuit (Signal Voltage High - Low Vacuum) ..... Page EMK. 4-46
Code 34 - MAP Sensor Circuit (Signal Voltage Low - High Vacuum) ..... Page EMK. 4-48
Code 41 - Engine Speed Signal Missing ..... Page EMK. 4-50
Code 42 - Electronic Spark Timing (EST) Circuit ..... Page EMK. 4-52
Code 43 - Electronic Spark Control (ESC) Circuit ..... Page EMK. 4-54
Code 51 - PROM Error (Faulty or Incorrect Mem-Cal) ..... Page EMK. 4-56
Code 54 - CO-Potentiometer Circuit (Signal Voltage High or Low) ..... Page EMK. 4-56

DIAGNOSTIC CIRCUIT CHECK

The "Diagnostic Circuit Check" verifies the system is functioning correctly. Some special considerations to keep in mind while making the "Diagnostic Circuit Check" are:

Blocking Drive Wheels

The vehicle drive wheels should always be blocked while checking the system.

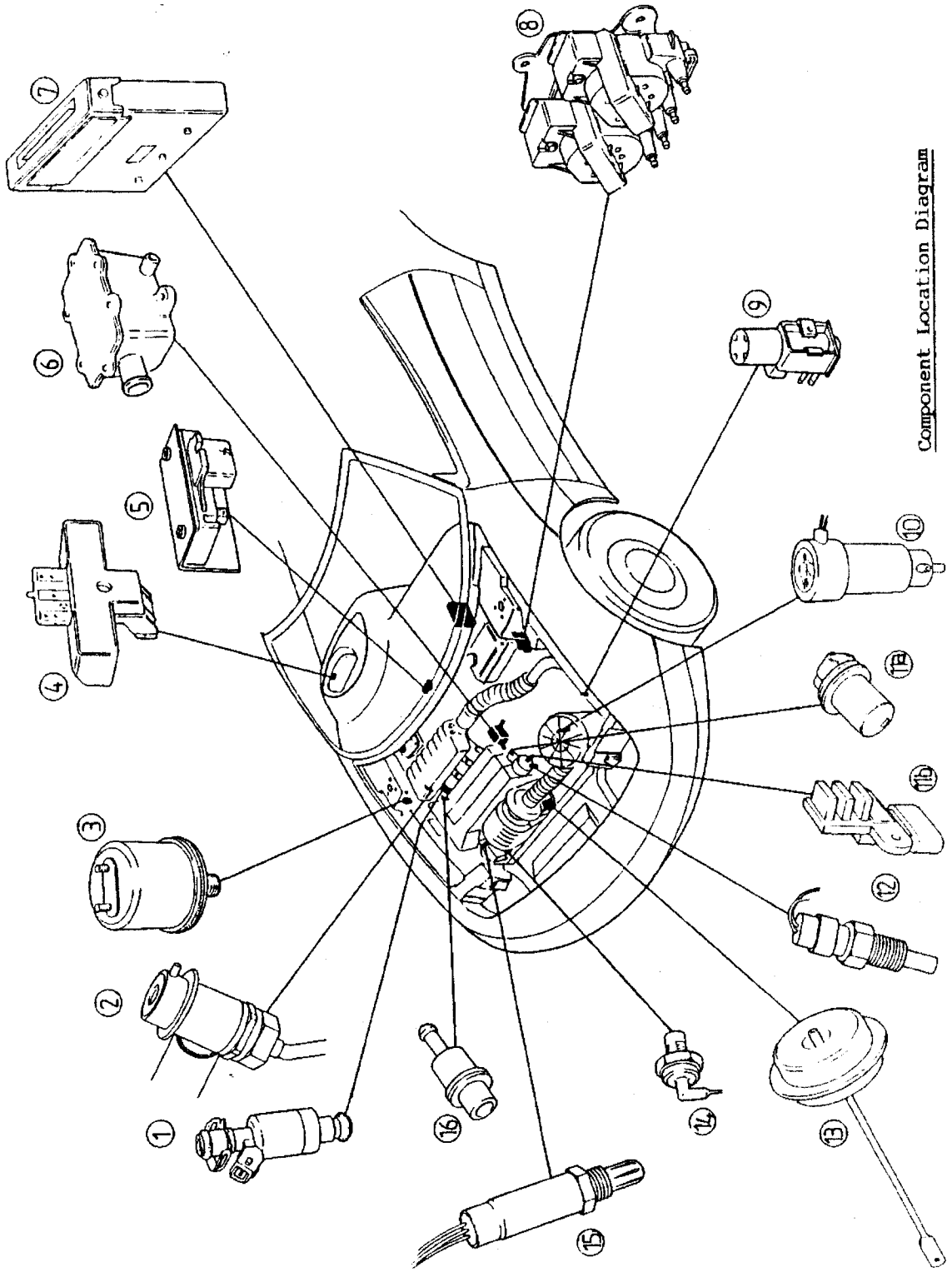

Component Location Diagram

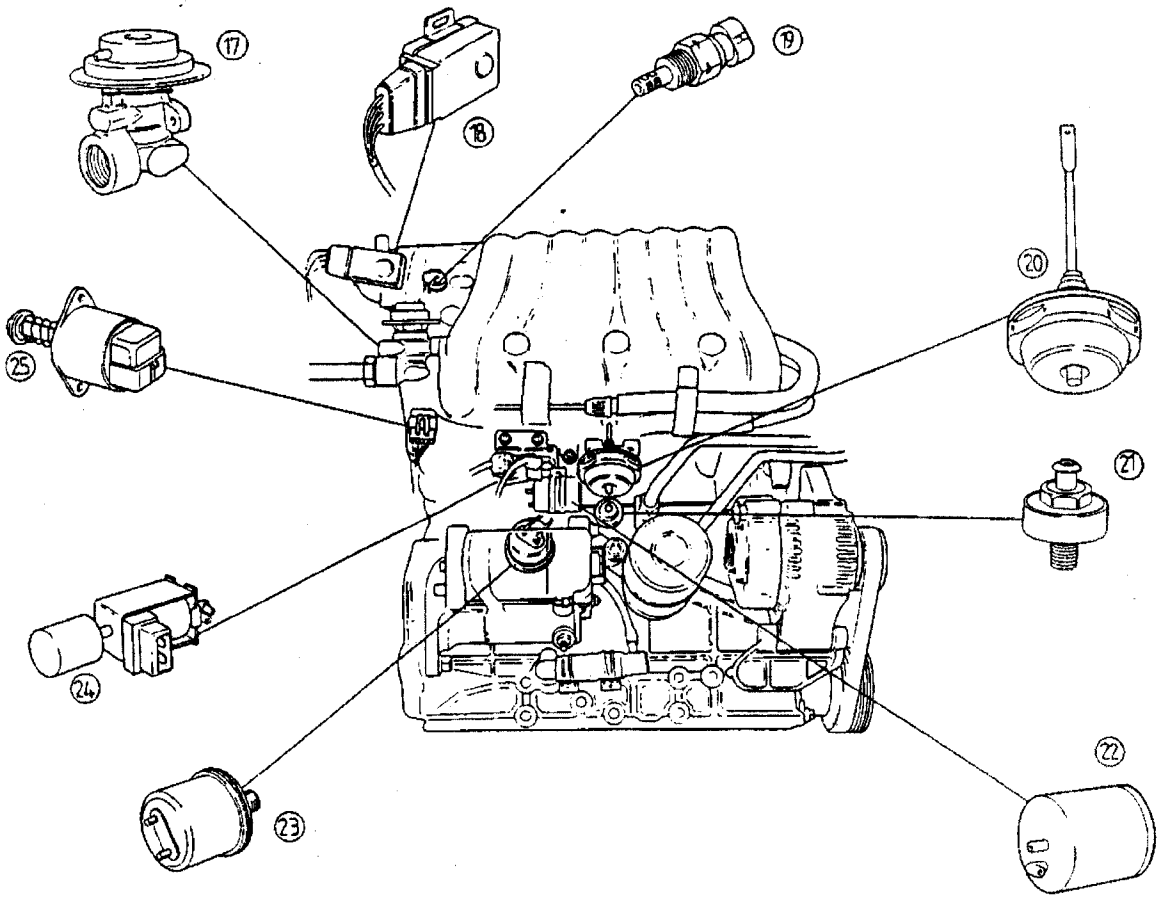

Component Location - Rear Side of Engine

Key to Component Location Diagram

1. Fuel injector
2. Fuel pressure regulator valve
3. Boost gauge transducer
4. Vehicle Speed Sensor (VSS)
5. Manifold Air Pressure (MAP) sensor
6. Crankcase breather oil seperator
7. Electronic Control Module (ECM)
8. Ignition module & H.T. coils
9. Exhaust Gas Recirculation (EGR) vacuum solenoid valve
10. Boost control frequency valve
11. Cam angle sensor:
    11A. Magnetic pick up
    11B. Hall effect sensor
12. Coolant Temperature Sensor (CTS)
13. Wastegate actuator capsule
14. Power Steering Pressure Switch (PSPS)
15. Oxygen (O_2) sensor
16. Positive Crankcase Ventilation (PCV) valve
17. Exhaust Gas Recirculation (EGR) valve
18. Throttle Position Switch (TPS)
19. Manifold Air Temperature (MAT) sensor
20. Secondary throttle vacuum actuator
21. Knock sensor
22. Secondary throttle vacuum reservoir
23. Oil pressure transducer
24. Secondary throttle vacuum solenoid valve
25. Idle Air Control (IAC) valve

FUSES & RELAYS

Right Hand
Drive Shown

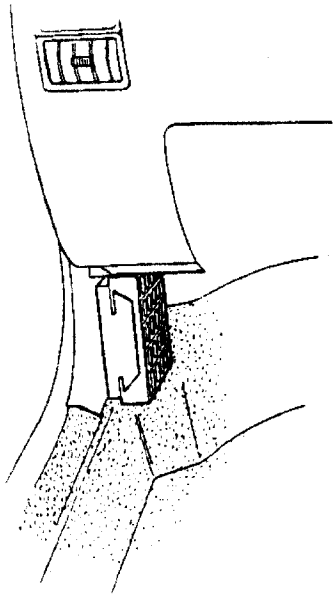

Main Fusebox (A) - ahead of passenger door hingepost

Fuse	Rating	Circuit
1	15A	Horns
2	7.5A	Air Cond.
3	7.5A	Fuel Pump
4	10A	RHD Lighting
	7.5A	LHD CDL
5	10A	ECM
6	5A	RH Sidelamps
7	5A	LH Sidelamps
8	3A	Radio Relay Logic (USA)
9	-	
10	3A	VSV
11	10A	Hazard
12	3A	Batt Services
13	5A	Stoplamps
14	5A	Int. Lamps
15	15A	Rear Fog
16	10A	DI & Reverse
17	15A	Wash/wipe
18	3A	Ignition 1
19	3A	Mirror Timer
20	3A	Ign. Relay
21	5A	Mirrors
22	3A	Window Switch
23	20A	Heater Blower
24	15A	Cigar Lighter
25	-	

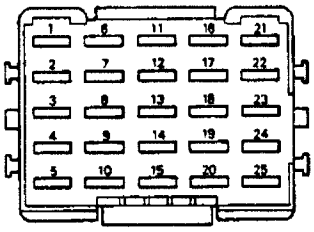

Relays Above Instrument Cluster

Relay	Circuit	Relay	Circuit
A	-	K	-
B	Air Conditioning	L	Rear Fog Lamps
C	Cooling Fans	M	ECM
D	Blower Fan Fast	N	Blower Fan Slow (a/c cars only)
E	Main Beam	O	Horns
F	Dip Beam		
G	Elec Coolant Pump		
H	Ignition		
J	Start		

Fuses Above Instrument Cluster

Fuse	Rating	Circuit
Fusebox/Row B		
1	20A	RH Window Lift
2	20A	LH Window Lift
3	15A	RH Cooling Fan
4	15A	LH Cooling Fan
Fusebox C		
1	15A	LH H/L Motor
2	15A	RH H/L Motor
3	7.5A	RHD CDL
	10A	LHD Lighting
4	5A	Coolant Pump
5	7.5A	LH Dip Beam
6	7.5A	RH Dip Beam
7	7.5A	LH Main Beam
8	7.5A	RH Main Beam

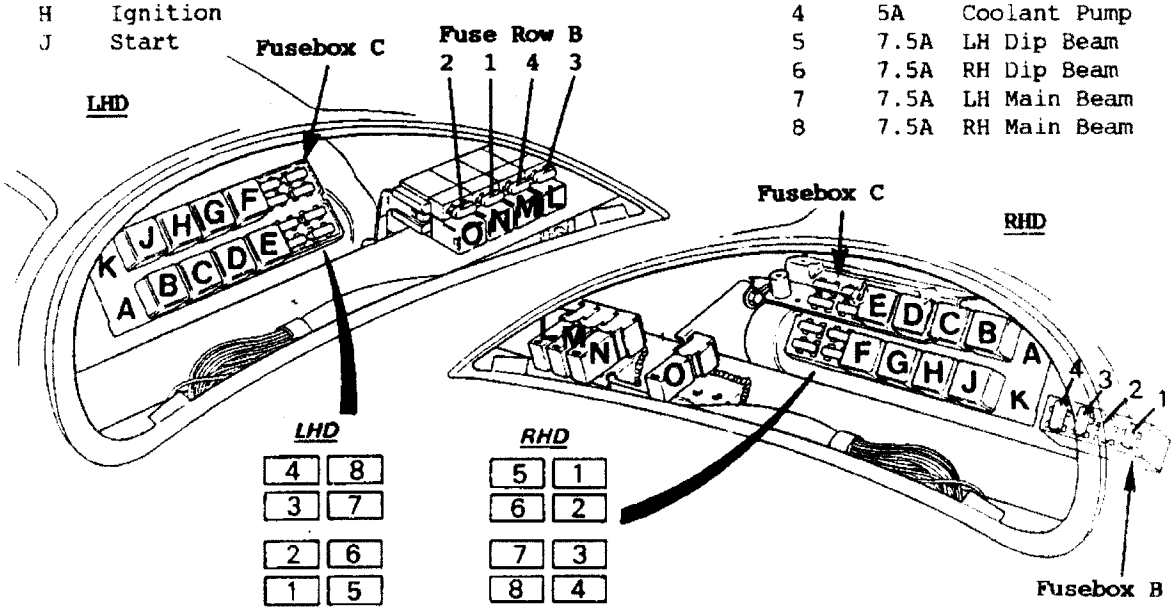

RHD

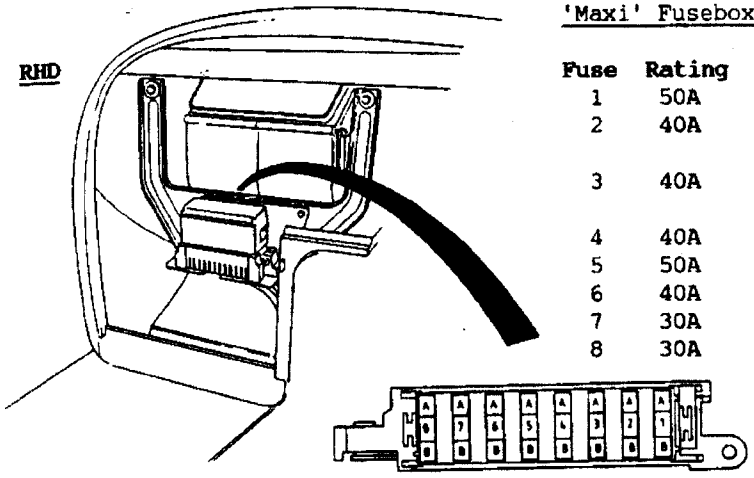

'Maxi' Fusebox (D) on Tunnel Top

Fuse	Rating	Circuit
1	50A	Window Lift Motors
2	40A	Horn,A/C,Fuel Pump,Lights RHD Lights, LHD CDL
3	40A	Haz,Batt Serv,Stop Lamps, Int Lamps,Rear Fog
4	40A	Ignition Switch
5	50A	Start Relay
6	40A	H/lamps & Mtrs,LHD Lights
7	30A	Cooling Fans Relay
8	30A	ECM

LHD

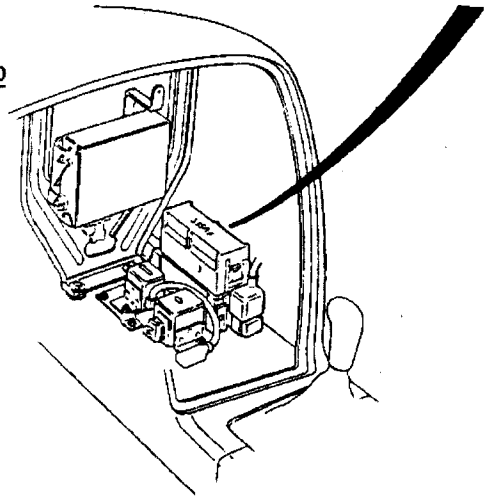

Fuses & Relays in Battery Compartment & Speaker Compartment

Fuse	Rating	Circuit
1	5A	Radio
2	7.5A	Radio Antenna
3	-	'phone +12V Battery
4	-	'phone +12V Ignition

Relay	Circuit
A	Inertia Switch
B	Fuel Pump
C	Cellular 'Phone
D	Radio Feed (USA only)

LHD Speaker Compartment

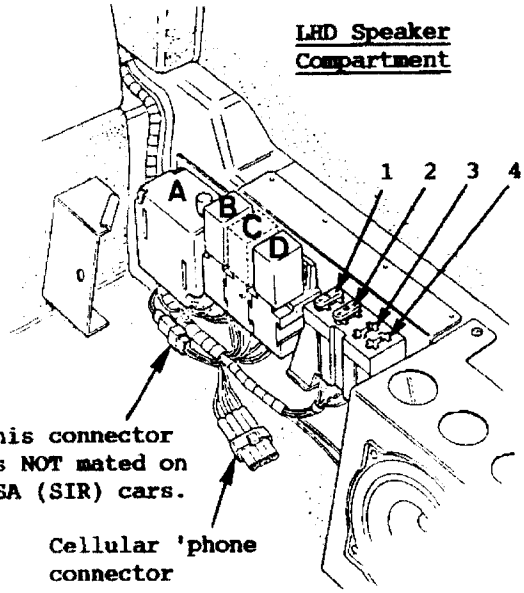

RHD Battery Compartment

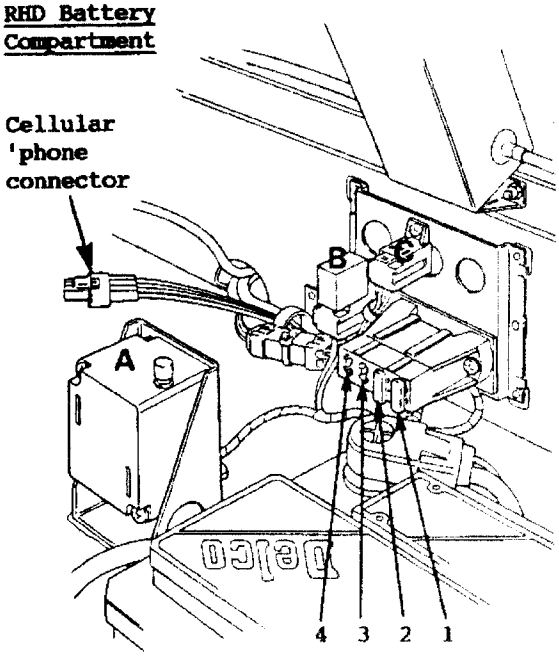

ECM CONNECTOR IDENTIFICATION

This ECM voltage chart is for use with a digital voltmeter to further aid in diagnosis. The voltages you get may vary due to low battery charge or other reasons, but they should be very close.

THE FOLLOWING CONDITIONS MUST BE MET BEFORE TESTING:

- Engine at operating temperature
- Engine idling
- A/C "OFF"
- ALDL Test terminal not grounded
- ALDL tool not installed
- All voltages showing "B+" indicates battery or charging system voltage
- All voltages showing "0" are ground circuits, and should read less than 0.10 volts

J1

VOLTAGE DC KEY "ON"	VOLTAGE DC ENG. RUN	CIRCUIT	PIN	WIRE COLOUR
*	B+	FUEL PUMP RELAY	A1	WLG
0	0	A/C CLUTCH CONTROL	A2	KG
		NOT USED	A3	WB
B+	0.2	SEC. THROTTLES CONTROL SOLENOID	A4	WU
.1	B+	CHECK ENGINE LIGHT	A5	PLG
B+	B+	12 VOLT IGNITION	A6	RG
			A7	
5.0	5.0	SERIAL DATA OUTPUT	A8	OY
5.0	5.0	DIAGNOSTIC REQUEST	A9	WB
**	**	VSS SIGNAL INPUT	A10	BY
0	0	MAT-, CTS-, CO-SENSOR GROUND	A11	S
0	0	ENGINE GROUND	A12	B

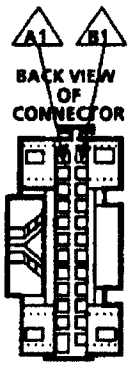

WIRE COLOUR	PIN	CIRCUIT	VOLTAGE DC KEY "ON"	VOLTAGE DC ENG. RUN
NP	B1	12V BATTERY	B+	B+
WG	B2	FUEL PUMP INPUT	*	B+
YB	B3	REFERENCE SIGNAL GROUND	0	0
B	B4	ENGINE GROUND	0	0
YR	B5	REFERENCE INPUT SIGNAL	0	1.5
	B6			
	B7			
KU	B8	AIR CONDITIONING REQUEST INPUT	0	0
YU	B9	ENGINE POSITION INPUT	***	***
	B10			
UK	B11	KNOCK SENSOR INPUT	2.5	2.5
SU	B12	CO-POTENTIOMETER SIGNAL INPUT	.6 TO 4.2	.6 TO 4.2

J2

			C1	
B+	B+	WASTEGATE SOLENOID	C2	WP
NOT VALID		IAC (COIL B LOW)	C3	NY
NOT VALID		IAC (COIL B HIGH)	C4	NR
NOT VALID		IAC (COIL A HIGH)	C5	NB
NOT VALID		IAC (COIL A LOW)	C6	NW
B+	B+	POWER STEERING SWITCH INPUT	C7	BU
			C8	
			C9	
****	2.4TO 1.0	COOLANT TEMP SENSOR SIGNAL INPUT	C10	SB
2.5	0.6TO 1.0	MAP SENSOR SIGNAL INPUT	C11	SR
****	3.0TO 1.5	MAT SENSOR SIGNAL INPUT	C12	UB
0.38TO 0.42	0.38TO 0.42	TPS SIGNAL INPUT	C13	UR
5.0	5.0	+5V REFERENCE VOLTAGE OUTPUT	C14	UO
B+	B+	INJECTOR 2 & 4	C15	UY
B+	B+	12V BATTERY	C16	NP

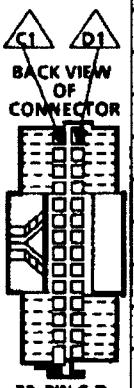

B	D1	ENGINE GROUND	0	0
BW	D2	TPS-, MAT-SENSOR GROUND	0	0
KO	D3	PEAK & HOLD JUMPER	0	0
Y	D4	EST OUTPUT	.1	1.2
YG	D5	BYPASS CONTROL CIRCUIT	0	4.5
B	D6	ENGINE GROUND	0	0
SG	D7	NOT USED		
KS	D8	PEAK & HOLD JUMPER	0	0
KO	D9	PEAK & HOLD JUMPER	0	0
	D10			
	D11			
WK	D12	EGR CONTROL	B+	B+
KS	D13	PEAK & HOLD JUMPER	0	0
	D14			
UW	D15	INJECTOR 1 & 3 DRIVE	B+	B+
	D16			

* B+ for 2 seconds after key "ON", then 0 volt --- **Signal voltage alternates between 0 and 12 volts depending on drive wheel position ---
*** 0 to 5 volts depending on camshaft position --- **** depending on ambient temperature

Figure EMK. 4-3 - ECM Terminal End View - 1.6L TURBO LOTUS ELAN

LOTUS ELAN WIRING CONNECTOR FACE VIEWS

INJECTOR CONNECTOR

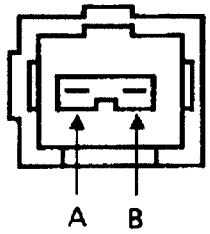

CO-POTENTIOMETER CONNECTOR

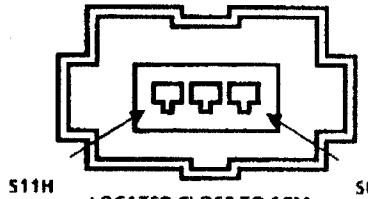

LOCATED CLOSE TO ECM IN PASSENGER FOOTWELL

INJECTOR HARNESS CONNECTOR A IHCA (ECM SIDE VIEW)

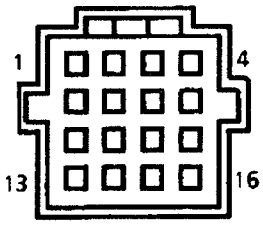

LOCATED AT THE LEFT HAND SIDE OF ENGINE BAY

INJECTOR HARNESS CONNECTOR B IHCB (ECM SIDE VIEW)

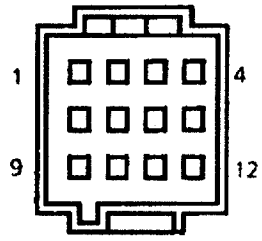

LOCATED AT THE LEFT HAND SIDE OF ENGINE BAY

MAIN HARNESS CONNECTOR MHC

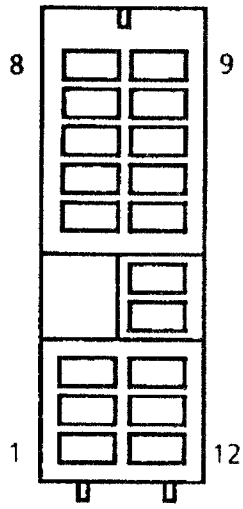

LOCATED UNDER INSTRUMENT PANEL (BEHIND RADIO)

INJECTOR HARNESS CONNECTOR A IHCA (INJECTOR SIDE VIEW)

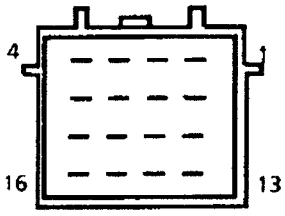

LOCATED AT THE LEFT HAND SIDE OF ENGINE BAY

INJECTOR HARNESS CONNECTOR B IHCB (INJECTOR SIDE VIEW)

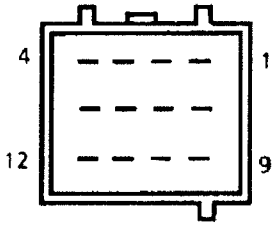

LOCATED AT THE LEFT HAND SIDE OF ENGINE BAY

Figure EMK. 4-4- Wiring Harness Connector Face Views - 1.6L TURBO LOTUS ELAN

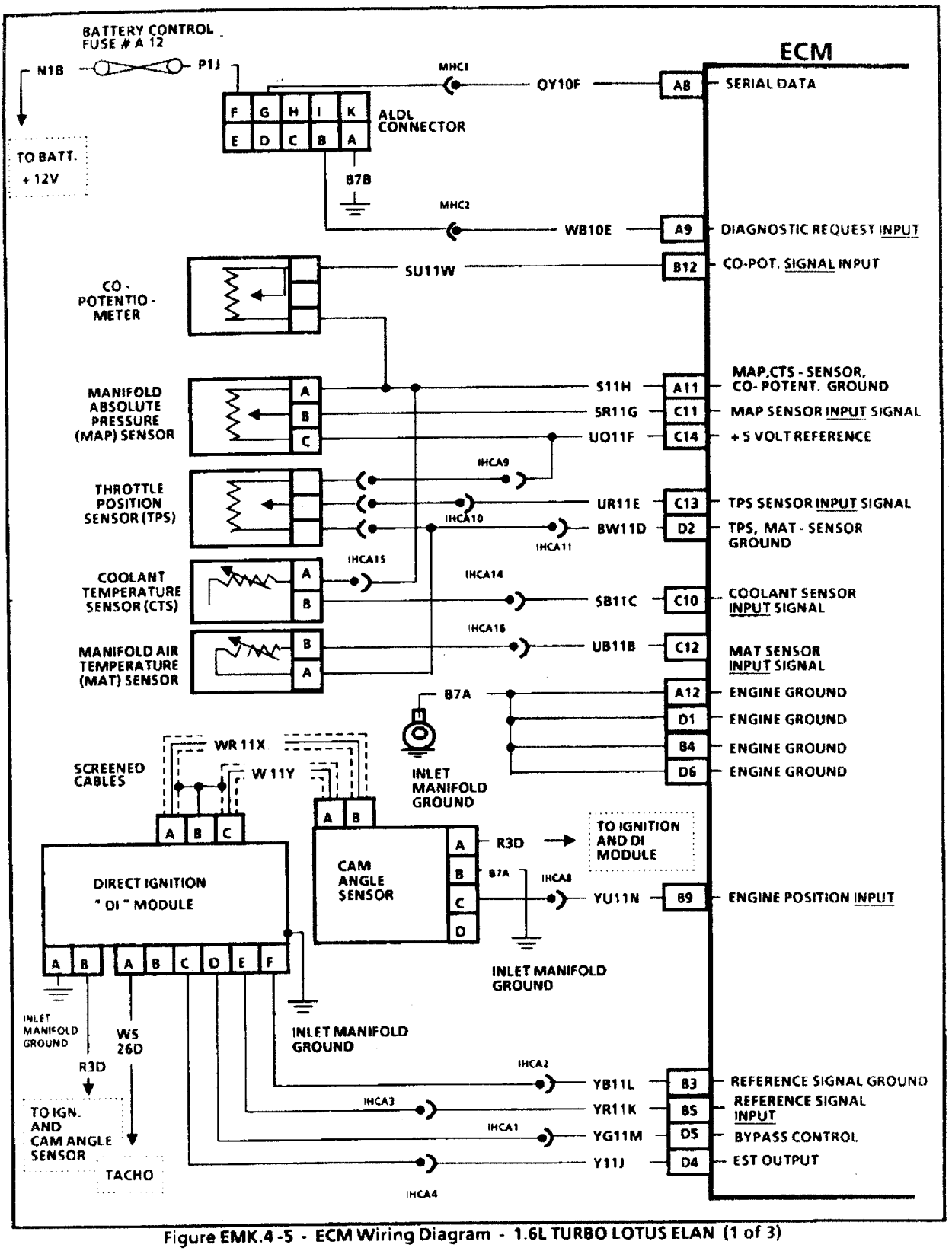

Figure EMK.4-5 - ECM Wiring Diagram - 1.6L TURBO LOTUS ELAN (1 of 3)

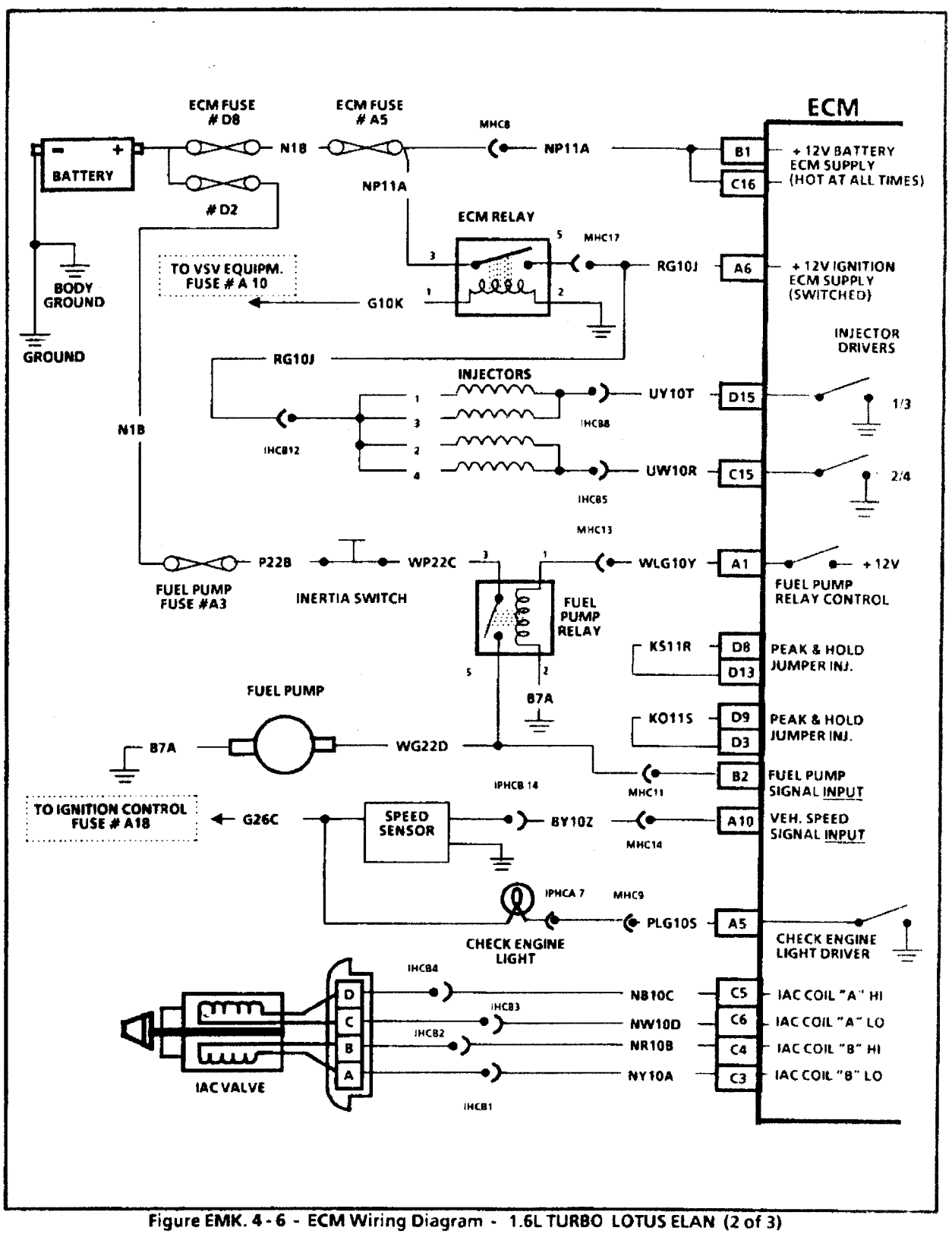

Figure EMK. 4 - 6 - ECM Wiring Diagram - 1.6L TURBO LOTUS ELAN (2 of 3)

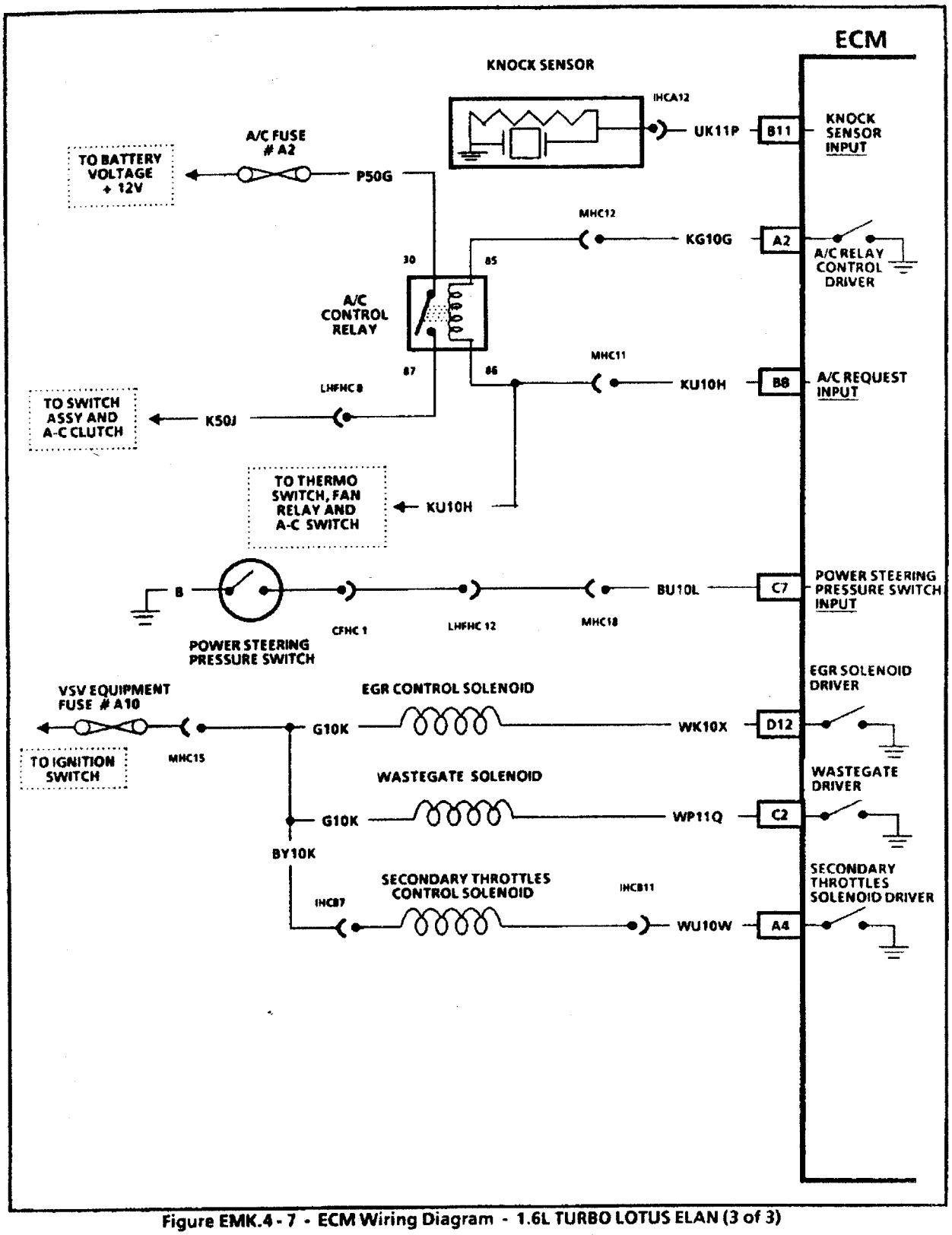

Figure EMK.4 - 7 - ECM Wiring Diagram - 1.6L TURBO LOTUS ELAN (3 of 3)

TECH 1 DATA

The TECH 1 Data listed in the figure EMK. 4-9 are to be used for comparison as part of the Diagnostic Circuit Check with engine running at idle speed and thermostat open. The "Typical Values" are an average of display values recorded from normally operating vehicles and are intended to represent what a normally functioning system would typically display.

IF THE TECH 1 DISPLAYS FAULTY DATA IT SHOULD NOT BE USED, AND THE PROBLEM SHOULD BE REPORTED TO THE MANUFACTURER. THE USE OF A FAULTY "TECH 1" CAN RESULT IN MISDIAGNOSIS AND UNNECESSARY PARTS REPLACEMENT.

Idle / Upper Radiator Hose Hot / Closed Throttle / A/C "OFF"

TECH 1 Position	Units Displayed	Typical Data Value (Range)	If Data Out Of Range, Refer To ...
Engine Speed	RPM	950	EMK.4-9 Chart
Desired Idle	RPM	950	-
Coolant Temp.	C/F	80 to 110	Code 14 / 15 Charts
Mass Air Temp.	C/F	20 to 60	Code 23 / 25 Charts
MAP	kPa, V	30 to 40	Code 33 / 34 Charts
BARO	kPA, V	dep. on altitude and baro	Code 33 / 34 Charts
Idle Air Control	0-255 Counts	10 to 30	EMK.4-9 Chart
Engine Speed	RPM	950	-
Throt. Position	V	0.40 ± 0.02	Code 21 / 22 Charts
Throttle Angle	0 to 100%	0	-
Oxygen Sensor	mV	Not used	-
Inj. Pulse Width	msec	1.5 - 2.0	-
Spark Advance	Degrees	8 - 20	-
MPH KPH	Units per hour	0 0	Code 24 Chart
Fuel Integrator	Counts	Not used	-
Block Learn	Counts	Not used	-
Open/Closed Loop	Open/Closed Loop	Open Loop	
Block Learn Cell	No.	Not used	-
Knock Retard	Degrees	0	Code 43 Chart
Knock Signal	Yes/No	No	Code 43 Chart
Battery Voltage	V	13.0 - 15.0	Check Battery
Purge Duty Cycle	Active / Inactive	Not used	-
A/C Request	Yes/No	No	Check A/C System
A/C Control	On/Off	Off	Check A/C System
Sync Pulses	0-255	0	Code 41 Chart
Park /Neutral	P- N / - R DL	- R - DL	-
Power Steering	High Press./Normal	Normal	EMK.3-H
2nd Throttle Sol	Active / Inactive	Active	EMK.3-L
Air Control Sol	Active/Inactive	Not used	-
EGR Solenoid	Active/Inactive	Inactive	EMK.3-T
CO Adj. Volts	V	0.6 - 4.2	Code 54 Chart
Wastegate D.C.	%	0	EMK.3-R
PROM ID	#	9239 or 9929	Prom Specification
Time from Start	min:sec	depends on time	-

Figure EMK.4 - 9 - LOTUS TECH 1 DATA

DIAGNOSTIC CIRCUIT CHECK

1.6L TURBO LOTUS ELAN

The Diagnostic Circuit Check is an organized approach to identifying a problem created by an Electronic Engine Control System malfunction. It must be the starting point for any driveability complaint diagnosis, because it directs the Service Technician to the next logical step in diagnosing the complaint.

The TECH 1 Data listed in the figures EMK. 4-8 and EMK. 4-9 are to be used for comparison as part of the Diagnostic Circuit Check and finding the on-board diagnostics functioning properly and no trouble codes displayed. The "Typical Values" are an average of display values recorded from normally operating vehicles and are intended to represent what a normally functioning system would typically display.

Only the parameters listed in figures EMK. 4-8 AND EMK. 4-9 are used in this manual for diagnosis. If TECH 1 reads other parameters, check if the correct Lotus cartridge is inserted. Check engine according to figure EMK.4-8 first and correct problems refering to the charts specified. If all values are within the range illustrated, start engine, run it up to normal operating temperature and proceed checking according to figure EMK.4-9.

Eng. "OFF" / Ign. "ON" / Eng. Cold (parked overnight)

TECH 1 Position	Units Displayed	Typical Data Value (Range)	If Data Out Of Range, Refer To ...
Engine Speed	RPM	0	-
Desired Idle	RPM	depends on coolant	-
Coolant Temp.	C/F	close to ambient	Code 14 / 15 Charts
Mass Air Temp.	C/F	ambient	Code 23 / 25 Charts
MAP	kPa, V	close to baro	Code 33 / 34 Charts
BARO	kPa, V	dep. on altitude and baro	Code 33 / 34 Charts
Idle Air Control	0-255 Counts	80	-
Engine Speed	RPM	0	-
Throt. Position	V	0.40 ± 0.02 (closed)	Code 21 / 22 Chart
Throttle Angle	0 to 100%	0 closed, >95 at WOT	Code 21 / 22 Chart
Oxygen Sensor	mV	Not used	-
Inj. Pulse Width	ms	depends on coolant	-
Spark Advance	Degrees	0	-
MPH KPH	Units per hour	0 0	-
Fuel Integrator	Counts	Not used	-
Block Learn	Counts	Not used	-
Open/Closed Loop	Open/Closed Loop	Open Loop	-
Block Learn Cell	No.	Not used	-
Knock Retard	Degrees	0	-
Knock Signal	Yes/No	No	-
Battery Voltage	Volts	11.0 - 12.5	Check Battery Voltage
Purge Duty Cycle	Active / Inactive	Not used	-
A/C Request	Yes/No	No	-
A/C Control	On/Off	Off	-
Sync Pulses	0-255	0	-
Park /Neutral	P- N / - R DL	- R - DL	-
Power Steering	High Press./Normal	Normal	EMK.3-H
2nd Throttle Sol	Active / Inactive	Inactive	-
Air Control Sol	Active/Inactive	Not used	-
EGR Solenoid	Active/Inactive	Inactive	-
CO Adj. Volts	V	0.6 - 4.2	Code 54 Chart
Wastegate D.C.	%	0	-
PROM ID	#	9239 or 9929	PROM Specification
Time from Start	min:sec	0:00	-

Figure EMK.4-8 - LOTUS TECH 1 DATA

DIAGNOSTIC CIRCUIT CHECK
1.6L TURBO LOTUS ELAN

- IGNITION "ON" ENGINE "OFF".
- NOTE "CHECK ENGINE" LIGHT.

STEADY LIGHT

- JUMPER ALDL TERMINAL "A" TO "B".
- DOES "CHECK ENGINE" LIGHT FLASH CODE 12?

YES

DOES TECH 1 DISPLAY ECM DATA? (IF THERE IS NO TECH 1 AVAILABLE CONTINUE WITH TEST STEP 1.)

YES

COMPARE TECH 1 WITH TYPICAL VALUES SHOWN IN FIGURE EMK. 4-8 "TECH 1 DATA". ARE VALUES NORMAL OR WITHIN TYPICAL RANGES?

YES

DOES ENGINE START?

YES

ARE ANY CODES DISPLAYED?

YES

REFER TO APPLICABLE CODE CHART. START WITH LOWEST CODE.

NO

- CONDUCT TEST DRIVE WITH TECH 1 IN SNAPSHOT MODE REPRODUCING THE CONDITIONS THE CUSTOMER COMPLAINED.
- TRIGGER "SNAPSHOT" IN CASE OF PROBLEM BY PRESSING "ENTER" KEY.
- CHECK VALUES IF THEY MAKE SENSE UNDER THE DRIVING CONDITIONS TESTED.
- REFER TO CHARTS ACCORDING TO FIGURE EMK. 4-9 TO LOCATE PROBLEM THEN.
- IN CASE THERE IS NO TECH 1 AVAILABLE REFER TO "INTERMITTENTS", SECTION EMK.6.
- REPEAT "DIAGNOSTIC CIRCUIT CHECK".

NO

SEE CHART EMK. 4-3

NO

SEE CHART EMK. 4-2

NO

SEE CHART EMK. 4-2

NO

- REFER TO CODE CHARTS INDICATED IN FIGURE EMK. 4-8.
- REPAIR SYSTEM
- REPEAT "TECH 1 DATA" CHECK ACCORDING TO FIG. EMK.4-8.

NO LIGHT

SEE CHART EMK. 4-1

FLASHING LIGHT

ERRATIC OR INTERMITTENT AT TIMES

CHECK CKT PLG10S FOR INTERMITTENT CONTACT TO GROUND. IF OK, SEE "INTERMITTENTS" SECTION EMK.6.

FLASHING CODE 12

CHECK DIAGNOSTIC CKT WB10E FOR SHORT TO GROUND BETWEEN ALDL CONN. TERM "B" AND ECM.

CLEAR CODES AND CONFIRM NO "CHECK ENGINE" LIGHT.

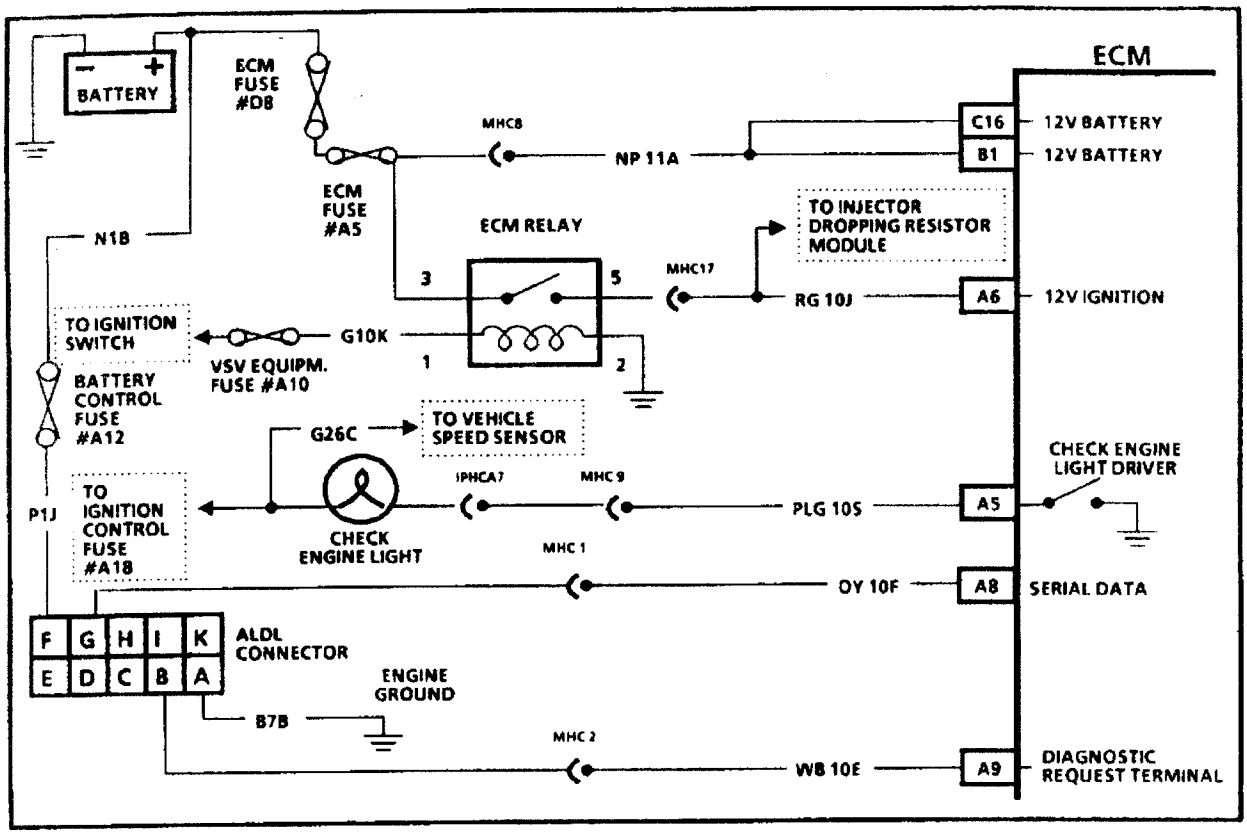

CHART EMK.4-1

NO "CHECK ENGINE" LIGHT
1.6L TURBO LOTUS ELAN

Circuit Description:

There should always be a steady "Check Engine" light when the ignition is "ON" and engine stopped. Battery ignition voltage is supplied directly to the light bulb from fuse A18. The Electronic Control Module (ECM) will control the light and turn it on by providing a ground path through CKT PLG 10S to the ECM.

Test Description:

Numbers below refer to circled numbers on the diagnostic chart.

1. Engine runs ok, check:
   - Faulty light bulb.
   - CKT PLG 10S open.
   - Ignition control fuse #A18 blown (Battery charge warning light would be on).

   Engine cranks but will not run. Possible causes:
   - ECM fuses # D8 or # A5 open.
   - VSV equipment fuse # A10 blown.
   - Battery CKT NP11A to ECM open.
   - Ignition CKT RG10J to ECM open.
   - Ignition CKT G10K to ECM relay open
   - Poor connection to ECM.
   - Faulty ECM relay located under binnacle cover.

RHD Heater Cars: The ALDL connector is stowed in a socket fixed to the bulkhead at the front of the passenger footwell.

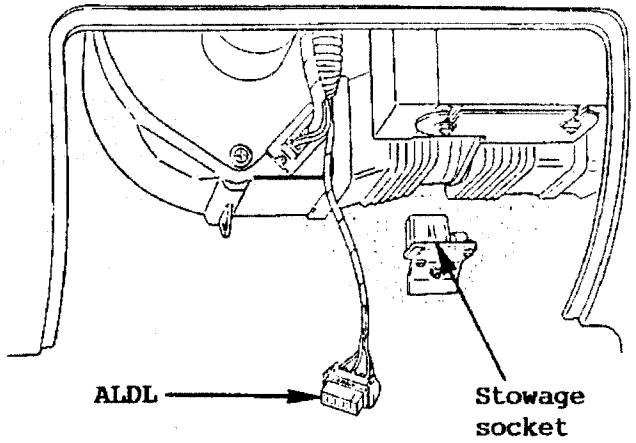

LHD Heater Cars: The ALDL connector is stowed in a socket fixed to the bulkhead at thefront of the passenger footwell.

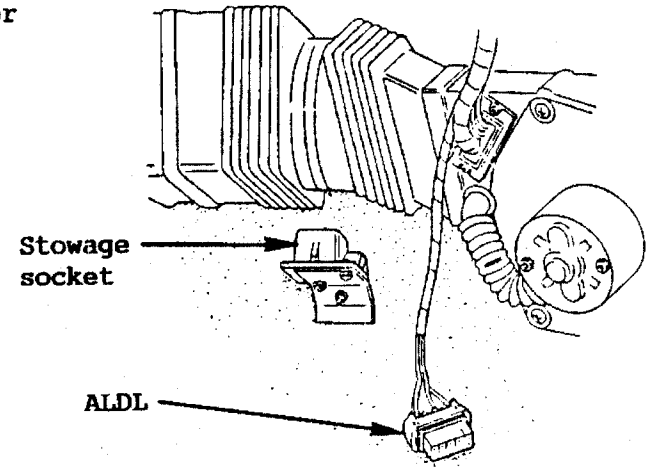

RHD Air Conditioned Cars: The ALDL connector is stowed in a socket fixed to the blower fan housing. Release the glovebox striker and swing down the glovebox for access.

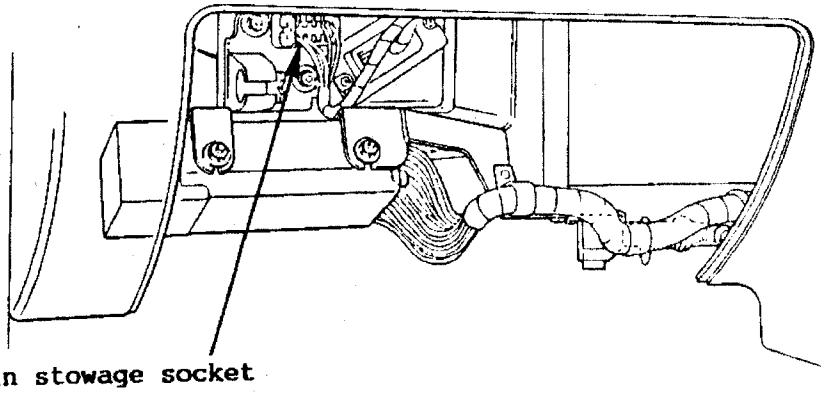

LHD Air Conditioned Cars: The ALDL connector is stowed in a socket fixed to the underside of the evaporator housing, at the front of the passenger footwell.

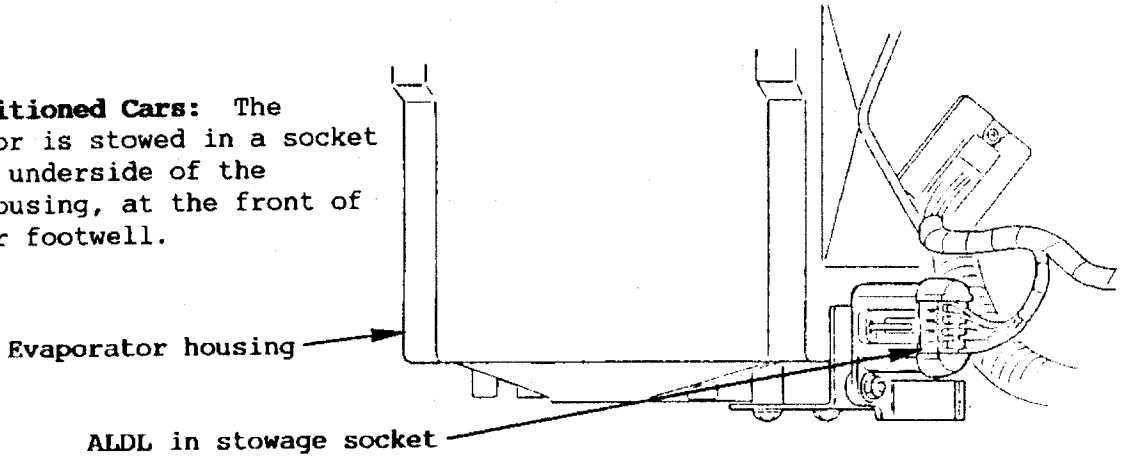

CHART EMK.4-1

NO "CHECK ENGINE" LIGHT 1.6L TURBO LOTUS ELAN

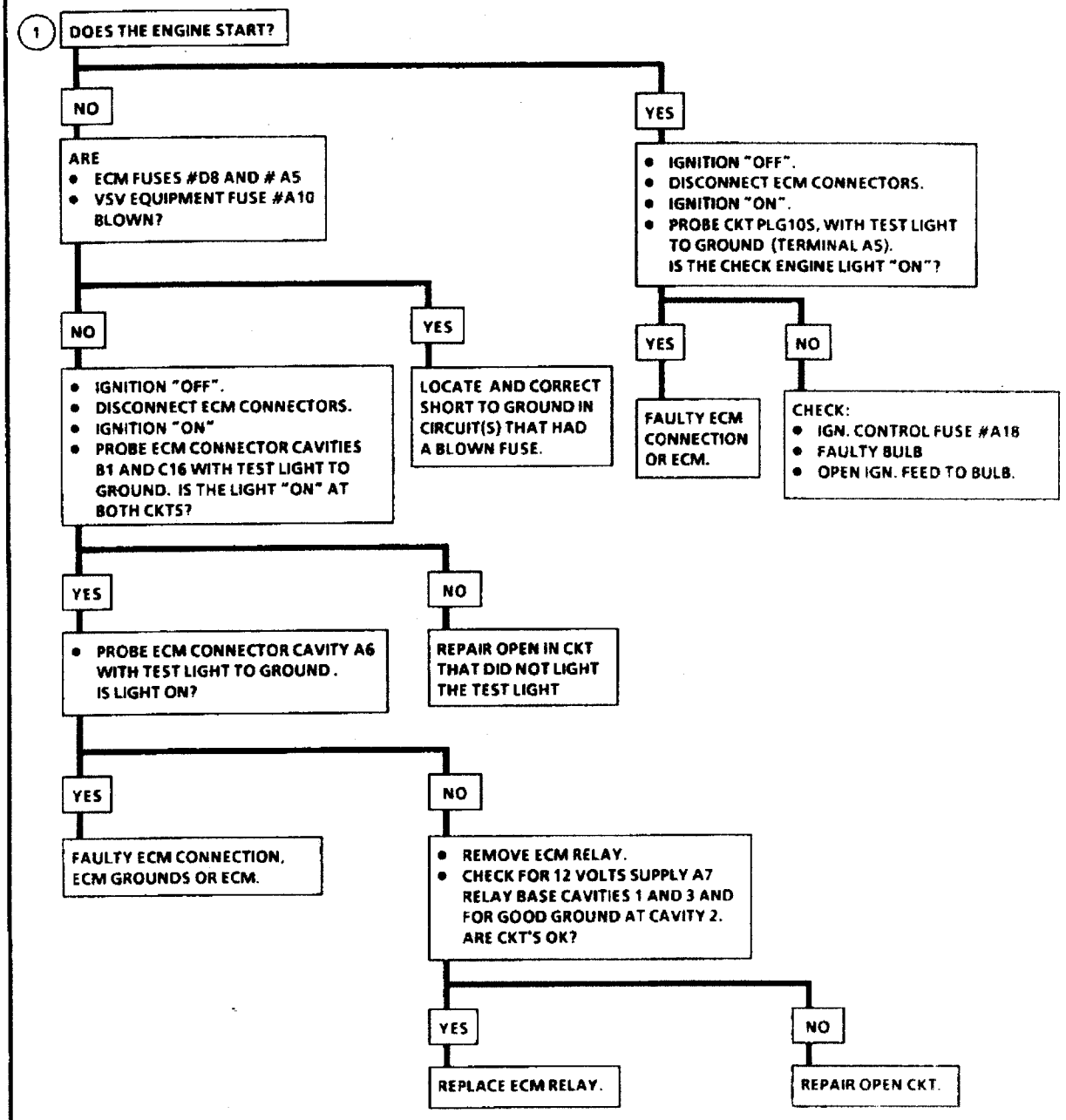

CLEAR CODES AND CONFIRM NO "CHECK ENGINE" LIGHT.

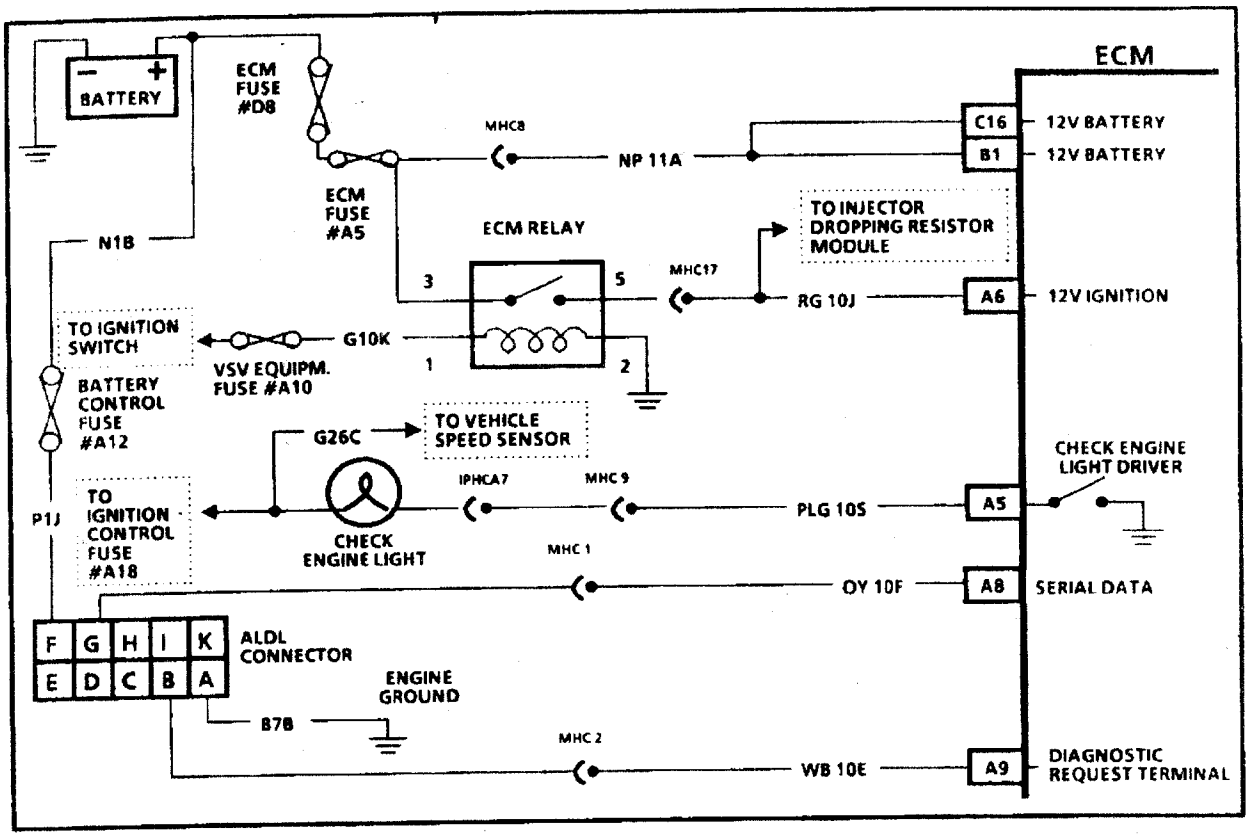

CHART EMK. 4-2

NO ALDL DATA OR WON'T FLASH CODE 12
("CHECK ENGINE" LIGHT ON STEADY)
1.6L TURBO LOTUS ELAN

Circuit Description:

There should always be a steady "Check Engine" light when the ignition is "ON" and engine stopped. Battery ignition voltage is supplied to the light bulb. The Electronic Control Module (ECM) will turn the light on by grounding CKT PLG10S to the ECM.

With the diagnostic terminal grounded, the light should flash a Code 12, followed by any trouble code(s) stored in memory.

A steady light suggests a short to ground in the light control CKT PLG10S, or an open in diagnostic CKT WB10E. The CHART EMK. 4-2 will confirm and suggest the cause.

Test Description:

Numbers below refer to circled numbers on the diagnostic chart.

1. If the light goes off when the ECM connector is disconnected, then CKT PLG10S is not shorted to ground. Take this opportunity to physically check the connector terminals for proper contact

2. If there is a problem with the ECM that causes the Tech 1 tool to not read serial data, then the ECM should not flash a Code 12. If Code 12 does flash, be sure that the Tech 1 is working properly on another vehicle. If the Tech 1 is functioning properly and CKT's OY10F and P1J are OK, the ECM may be at fault for the NO ALDL symptom.
3. This step will check for an open diagnostic CKT WB10E.

CHART EMK. 4-2

NO ALDL DATA OR WON'T FLASH CODE 12
("CHECK ENGINE" LIGHT ON STEADY)
1.6L TURBO LOTUS ELAN

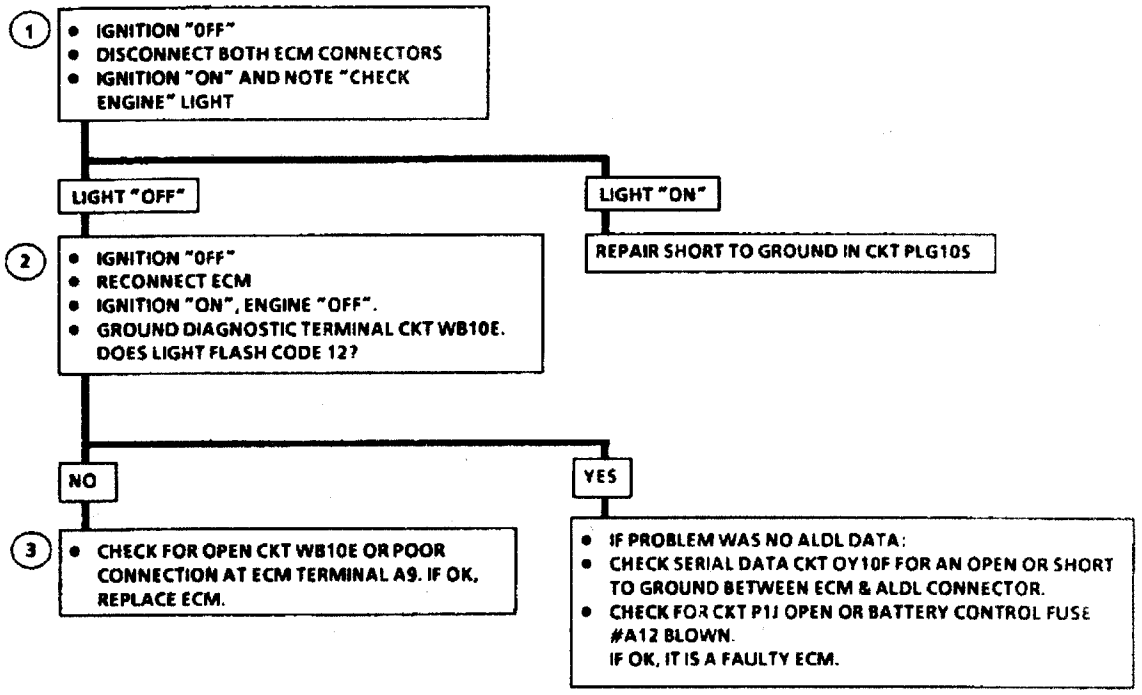

CLEAR CODES AND CONFIRM NO "CHECK ENGINE" LIGHT.

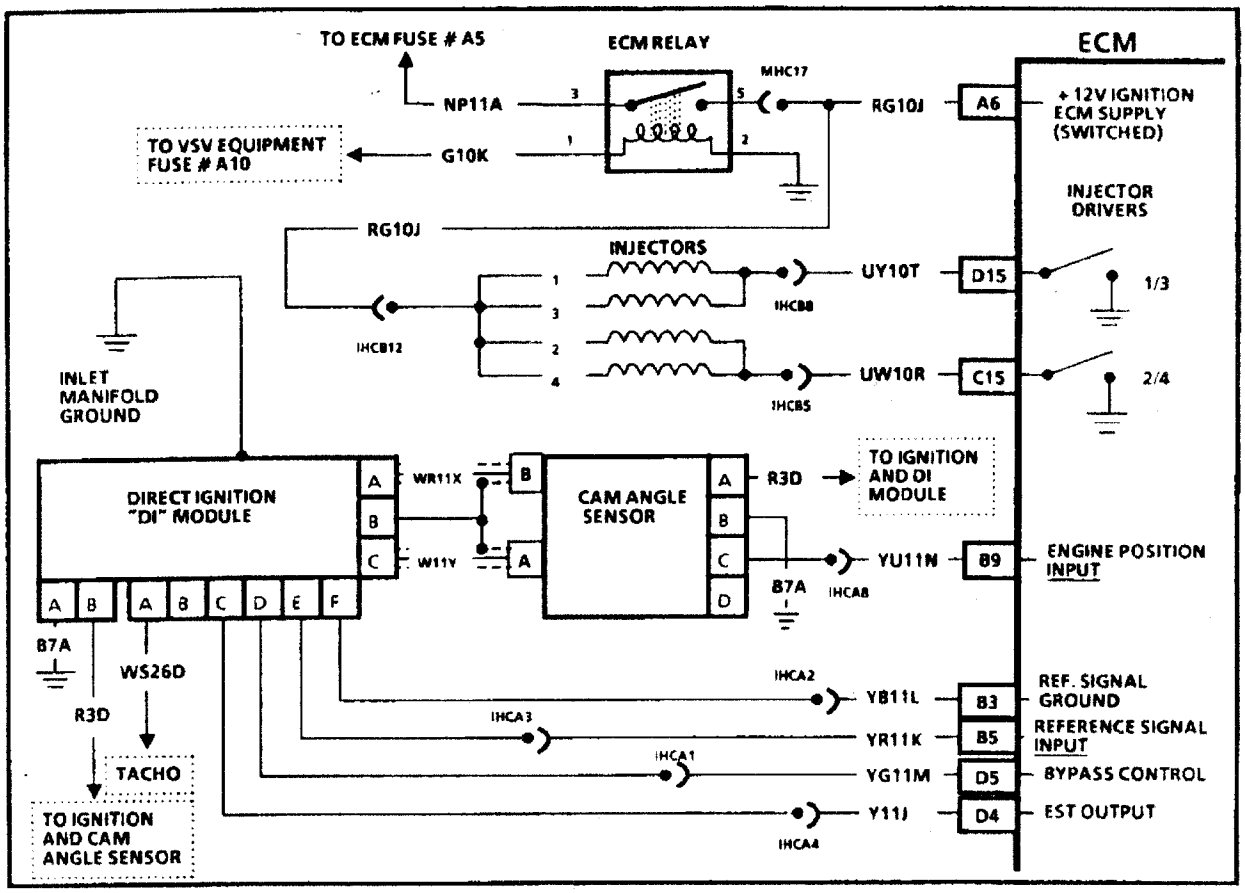

CHART EMK. 4-3

(Page 1 of 3)
ENGINE CRANKS BUT WON'T RUN
1.6L TURBO LOTUS ELAN

Circuit Description:

This chart assumes that battery condition and engine cranking speed are OK, and there is adequate fuel in the tank.

Test Description:

Numbers below refer to circled numbers on the diagnostic chart.

1. A "Check Engine" light "ON" is a basic test to determine if there is a 12 volt supply and ignition 12 volts to ECM. No ALDL may be due to an ECM problem and CHART EMK.4-2 will diagnose the ECM. If TPS is over 2.5 volts the engine may be in the clear flood mode which will cause starting problems.
2. The engine will not start without reference pulses and therefore the Tech 1 should read rpm during crank. The voltmeter should indicate voltage above 0.1 volt.
3. No spark may be caused by one of several components related to the Ignition System. CHART EMK.4-3, page 3 of 3 will address all problems related to the causes of a no spark condition.
4. The test light should blink, indicating the ECM is controlling the injectors ok. How bright the light blinks is not important. The engine may not start if only 2 injectors are functioning and therefore each injector should be tested.
5. Use fuel pressure gauge T000T0899 and test hose T000T1083 as detailed in Section EMK.3 - J.

Diagnostic Aids:

- An EGR valve sticking open can cause a low air/fuel ratio during cranking.
- An injector stuck open could flood the engine and result in a no start. In "Clear Flood" mode the engine might start. Check for fouled spark plugs.

If above are all OK, refer to Symptoms in Section EMK.6, "Hard Start".

CHART EMK. 4-3

(Page 1 of 3)

ENGINE CRANKS BUT WON'T RUN 1.6L TURBO LOTUS ELAN

1
- FUEL QUANTITY OK.
- IGNITION "ON". IF "CHECK ENGINE" LIGHT IS "OFF", SEE CHART EMK. 4-1.
- INSTALL TECH 1 TOOL. IF "NO ALDL", SEE CHART EMK. 4-2
- CHECK TECH 1 DATA ACCORDING TO FIGURE EMK.4-8. ARE DATA WITHIN RANGE SPECIFIED?

YES →
- DISCONNECT INJECTORS
- IGNITION "OFF" FOR 10 SECONDS
- IGNITION "ON". LISTEN FOR IN-TANK FUEL PUMP.
- PUMP SHOULD RUN FOR 2 SECONDS AFTER IGNITION "ON". DOES IT?

NO → REFER TO SYSTEM CHECKS AS INDICATED IN FIGURE EMK.4-8

YES →

2
- CHECK "ENGINE SPEED" ON TECH 1 WHILE CRANKING. SPEED INDICATED?
- IF NO TECH 1 AVAILABLE:
- IGNITION ON
- VOLTMETER ON AC SCALE
- BACKPROBE ECM CONNECTOR TERMINAL B5 WITH VOLTMETER TO GROUND. SHOULD BE 0.5 VOLTS AC OR MORE WHILE CRANKING. IS IT?

NO → SEE CHART EMK. 4-5

YES →

3
- INSTALL SPARK TESTER T000T0901 ON 2 ADJACENT PLUG WIRES 1 & 2, THEN 3 & 4 WHILE CRANKING WITH REMAINING PLUG WIRES STILL CONNECTED.
- SPARK SHOULD JUMP TESTER GAP ON ALL WIRES. DOES IT?

NO → SEE CHART EMK. 4-3 (3 OF 3)

YES →

4
- INSTALL INJECTOR TESTER T000T0900 AT EACH INJECTOR CONNECTOR.
- CRANK ENGINE AND OBSERVE TEST LIGHT. SHOULD BLINK ON ALL TESTS. DOES IT?

NO →
- INSTALL NEW SPARK PLUG WIRE WHERE NO SPARK WAS OBSERVED.
- REPEAT TEST. SPARK SHOULD JUMP TESTER GAP ON ALL WIRES. DOES IT?

YES → FAULTY SPARK PLUG WIRES OR POOR CONNECTION

NO → FAULTY DI MODULE CONNECTION OR MODULE

YES →
- WITH DVM ON 200 OHM SCALE MEASURE RESISTANCE OF INJECTORS SHOULD BE BETWEEN 1.6 AND 2.2 OHMS* IS IT?

NO → SEE CHART EMK.4-3 (2 OF 3)

YES →

5
- IGNITION "OFF".
- INSTALL FUEL PRESSURE GAUGE AND NOTE PRESSURE WHILE CRANKING ENGINE. SHOULD BE 280-325 kPa (40.5-47 psi). AND SHOULD HOLD WHEN ENGINE STOPS.

NO → REPLACE INJECTOR

OK →
- SEE DIAGNOSTIC AIDS ON FACING PAGE FOR ADDITIONAL ITEMS TO CHECK. IF ALL OK, FUEL INJECTION SYSTEM OK. REFER TO "HARD START" IN SECTION EMK.6

NOT OK → SEE CHART EMK. 4-7

* NOTE: INJECTOR RESISTANCE SPECIFICATIONIS AT 60°C (140°F) AND MAY BE SLIGHTLY HIGHER IF THE INJECTOR IS HOTTER

CLEAR CODES AND CONFIRM NO "CHECK ENGINE" LIGHT.

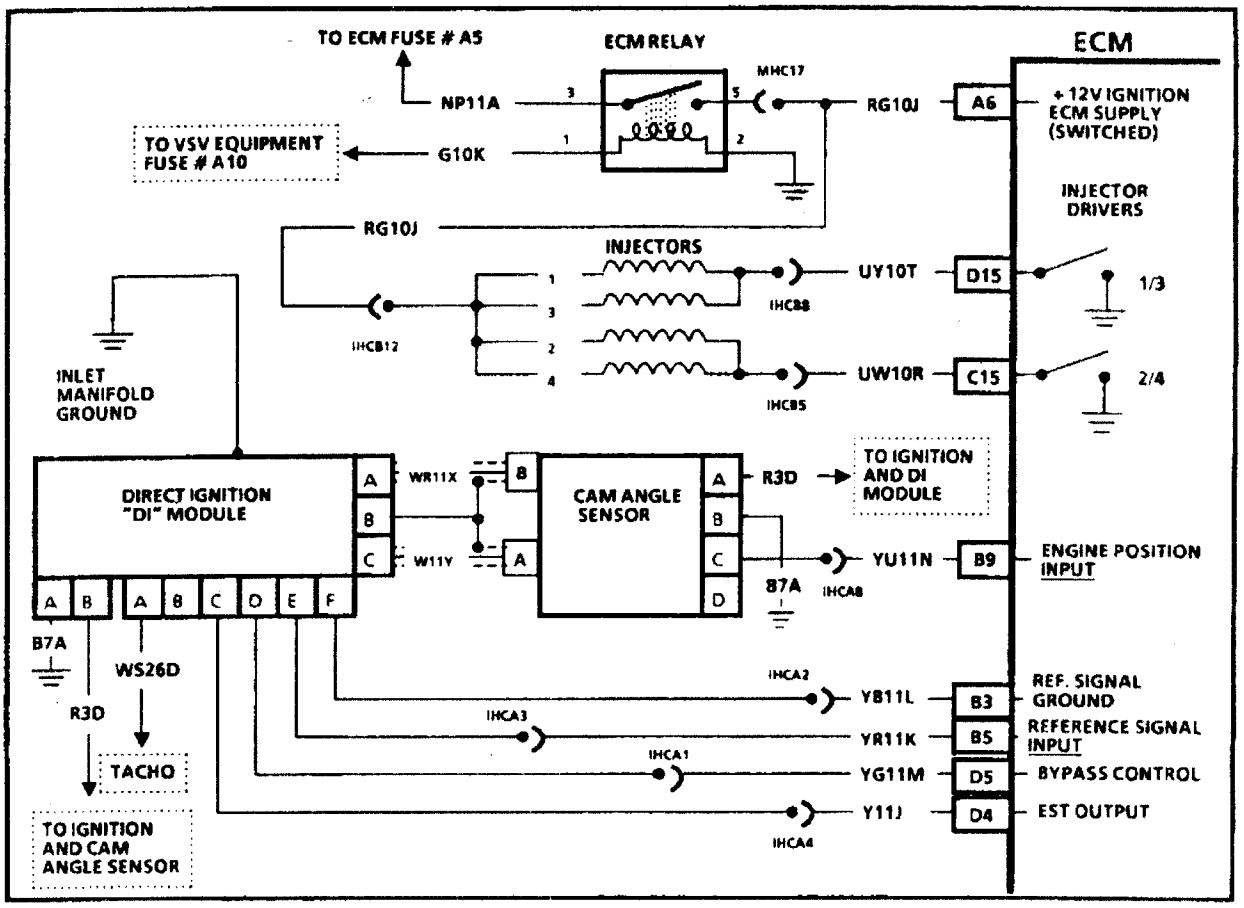

CHART EMK. 4-3

(Page 2 of 3)
ENGINE CRANKS BUT WON'T RUN
1.6L TURBO LOTUS ELAN

Circuit Description:

This chart assumes that battery condition and engine cranking speed are OK, and there is adequate fuel in the tank.

Test Description:

Numbers below refer to circled numbers on the diagnostic chart.

6. Checks where the problem is located in the injector circuitry.
7. This test determines if there is an ECM or wiring harness problem.

Diagnostic Aids:

- An EGR valve sticking open can cause a low air/fuel ratio during cranking.
- An injector stuck open could flood the engine and result in a no start. In "Clear Flood" mode the engine might start. Check for fouled spark plugs.

If above are all OK, refer to Symptoms in Section EMK.6, "Hard Start".

CHART EMK. 4-3

(Page 2 of 3)

ENGINE CRANKS BUT WON'T RUN 1.6L TURBO LOTUS ELAN

FROM CHART EMK. 4-3 (1 OF 3)

NO BLINKING LIGHT AT ONE OR ALL INJECTORS TESTED

NO LIGHT

6
- IGNITION "ON"
- PROBE INJECTOR CONNECTOR TERMINALS A WITH A TEST LIGHT TO GROUND
- LIGHT SHOULD BE "ON" AT ALL TERMINALS.

STEADY LIGHT

- CHECK INJECTOR DRIVER CKT WITH STEADY LIGHT FOR SHORT TO GROUND.

OK → FAULTY ECM

NOT OK → REPAIR SHORT TO GROUND.

LIGHT "OFF" ALL → OPEN CKT RG10J

LIGHT "ON" ALL

7
- RECONNECT INJECTOR(S)
- IGNITION "OFF"
- DISCONNECT ECM
- IGNITION "ON
- PROBE ECM TERMINALS D15 AND C15 WITH A TEST LIGHT TO GROUND

LIGHT "ON" → POOR CONNECTION OR FAULTY ECM

LIGHT "OFF" → OPEN CKT's UW10T AND UY10R

LIGHT "ON" LESS THAN ALL → OPEN CKT BETWEEN INJECTOR CONNECTOR AND INJECTOR HARNESS CONNECTOR CAVITY B12.

INJECTOR CONNECTOR

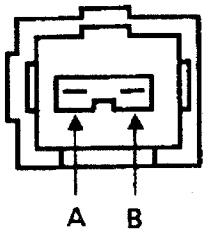

INJECTOR HARNESS CONNECTOR B

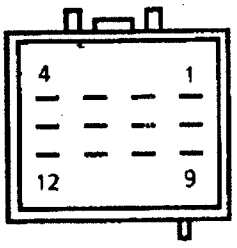

CLEAR CODES AND CONFIRM NO "CHECK ENGINE" LIGHT.

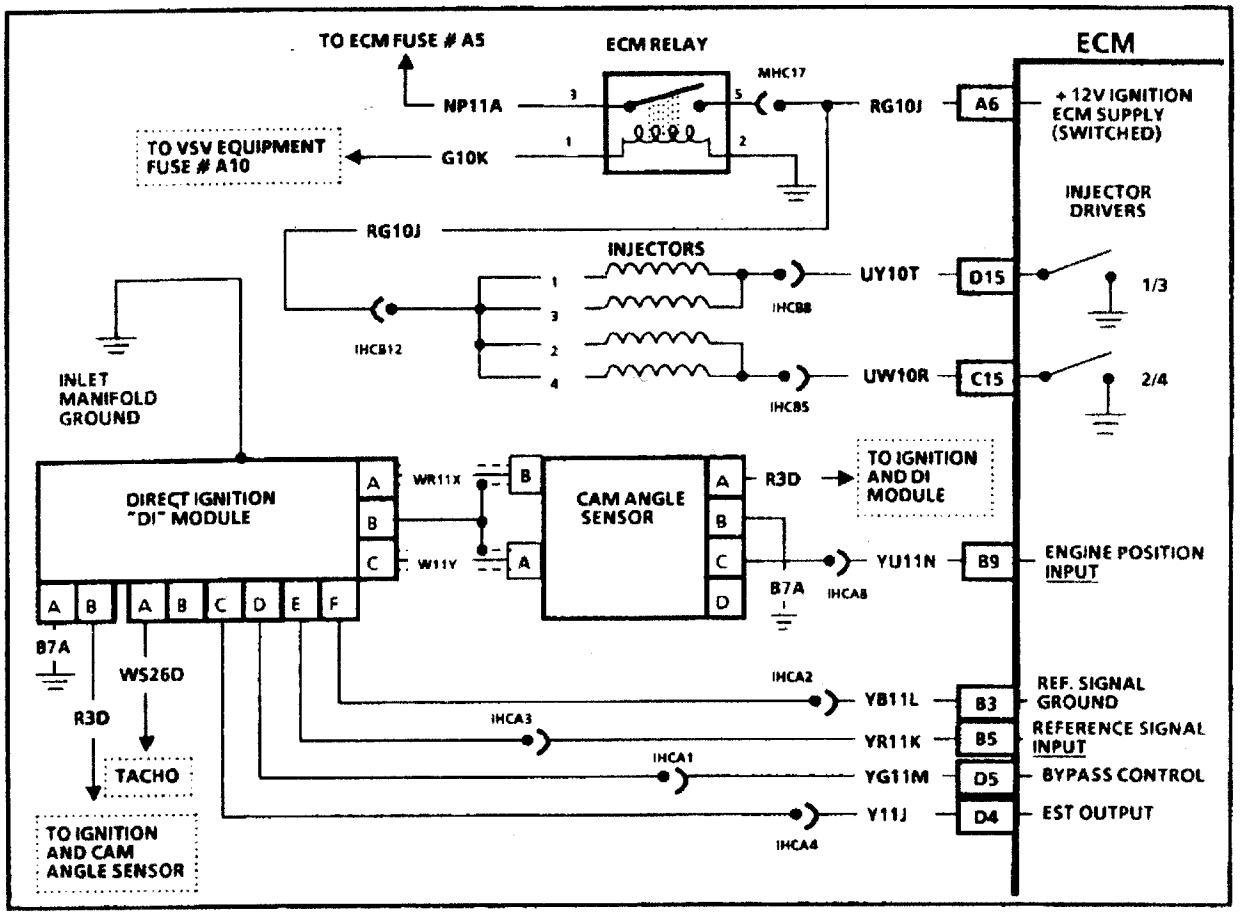

CHART EMK. 4-3

(Page 3 of 3)
ENGINE CRANKS BUT WON'T RUN
1.6L TURBO LOTUS ELAN

Circuit Description:

The "Direct Ignition" system (DI) uses a waste spark method of distribution. In this type of system the ignition module triggers the #1-4 coil pair resulting in both #1 and #4 spark plugs firing at the same time. #1 cylinder is on the compression stroke at the same time #4 is on the exhaust stroke, resulting in a lower energy requirement to fire #4 spark plug. This leaves the remainder of the high voltage to be used to fire #1 spark plug.

Test Description:

Numbers below refer to circled numbers on the diagnostic chart.

8. Battery voltage should be available at terminal "B" of the DI 2 pin connector, and terminal "A" should be a good ground.
9. The test light to 12V simulates a reference signal to the ECM which will result in an injector test light blink for every other touch of the test light, if CKT YR11K, the ECM and the injector driver circuit are all functioning properly.
10. The engine position sensor should output a voltage as the crankshaft turns. If no voltage is produced, the indication is a poor sensor connection or faulty sensor.
11. The engine position sensors core is a magnet, therefore, it should be magnetized and the resistance should be within a range of 1250 to 1450 ohms.

CHART EMK. 4-3

(Page 3 of 3)

ENGINE CRANKS BUT WON'T RUN 1.6L TURBO LOTUS ELAN

FROM CHART EMK. 4-3 PAGE 1 OF 3

8
- IGNITION "OFF", DISCONNECT 2 PIN DI HARNESS CONNECTOR.
- IGNITION "ON", CONNECT A TEST LIGHT BETWEEN HARNESS TERMINALS "A" AND "B" (CIRCUITS R3D AND B7A).
- TEST LIGHT SHOULD BE "ON". IS IT?

YES

NO
- CONNECT TEST LIGHT BETWEEN HARNESS TERMINAL "B", CIRCUIT R3D AND GROUND.
- TEST LIGHT SHOULD BE "ON". IS IT?

NO → OPEN CKT R3D.

YES → OPEN CKT B7B

9
- RECONNECT 2 PIN CONNECTOR, DISCONNECT 6 PIN DI AND INJECTOR CONNECTOR CYL.1
- CONNECT INJ. TEST LIGHT T000T0900 AT INJ. CONNECTOR 1.
- CONNECT A TEST LIGHT TO 12 VOLTS AT REVERSE LAMP SWITCH CONNECTOR LOCATED UNDER AIR FILTER AND REPEATEDLY TOUCH TO DI HARNESS TERMINAL "E".
- REPEAT TEST WITH INJ. TEST LIGHT CONNECTED TO INJ. CONNECTOR CYL. 2. INJECTOR TEST LIGHT SHOULD BLINK ON BOTH PINS. DOES IT?

YES

NO
- CHECK INJECTOR DRIVER CKT UW10R & UY10T FOR OPEN OR SHORT TO VOLTAGE. ARE CIRCUITS OK?

NO → REPAIR INJECTOR DRIVER CIRCUITS

YES → CHECK CKT YR11K FOR OPEN OR SHORT TO GROUND OR TO VOLTAGE. IF CKT YR11K IS OK, FAULT IS A POOR CONNECTION AT ECM TERMINAL "B5" OR FAULTY ECM.

10
- DISCONNECT 3-WAY DI CONNECTOR. CHECK VOLTAGE (DVM ON 2 VOLT AC SCALE) BETWEEN TERM A & B AT VARIABLE RELUCT CAM ANGLE SENSOR DURING CRANK. READING SHOULD BE 400 - 1000mV. IS IT?

(GREEN) REVERSE LAMP SWITCH CONNECTOR

NO

YES → FAULTY DI MODULE

11
- DISCONNECT 2 PIN CAM ANGLE SENSOR CONNECTOR.
- WITH DVM IN 2K POSITION, MEASURE RESISTANCE ACROSS SENSOR TERMINALS (RESISTANCE SHOULD BE BETWEEN 1250 AND 1450 OHMS).
- VERIFY THAT SENSOR IS STILL MAGNETIC AND INSPECT FOR DAMAGED TERMINALS. IS SENSOR OK?

NO → REPLACE CAM ANGLE SENSOR

YES → CKT'S WR11X OR W11Y GROUNDED, CONNECTED TO VOLTAGE OR OPEN

CLEAR CODES AND CONFIRM NO "CHECK ENGINE LIGHT".

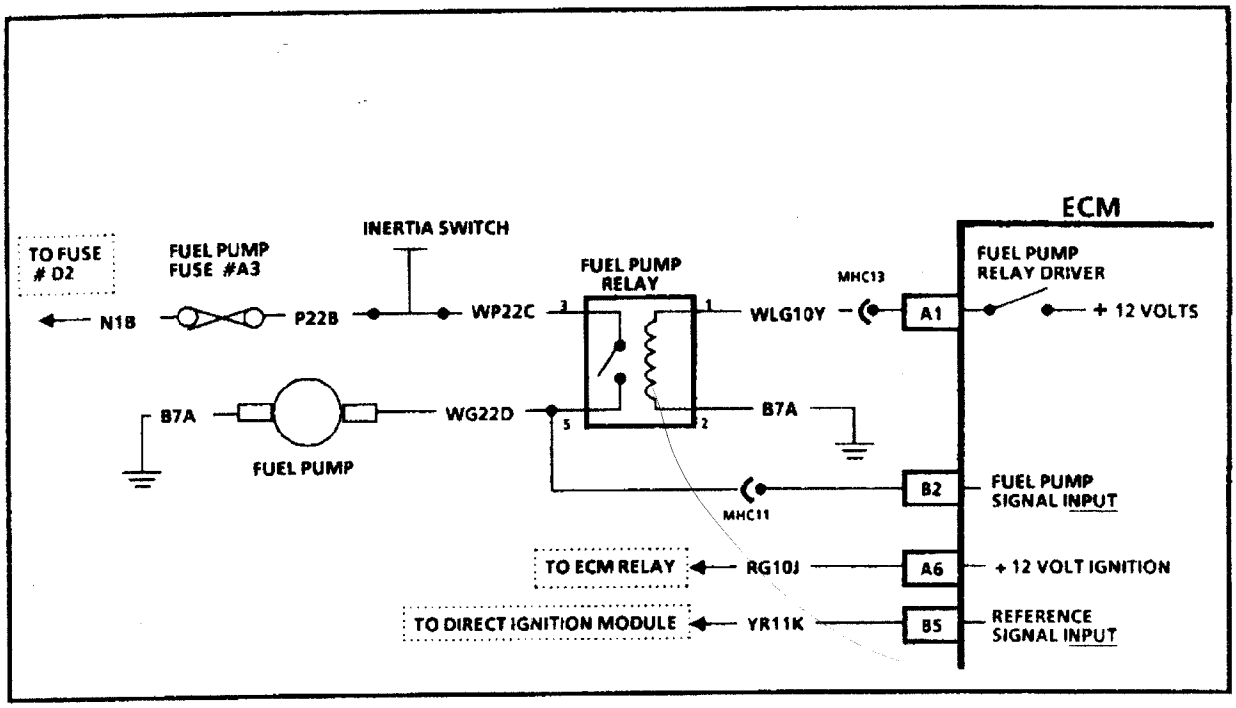

CHART EMK. 4-5

FUEL PUMP RELAY CIRCUIT
1.6L TURBO LOTUS ELAN

Circuit Description:

When the ignition switch is turned "ON", the Electronic Control Module (ECM) energizes its fuel pump relay control output. It will provide +12 volts to the fuel pump relay, as long as the engine is cranking or running, and the ECM is receiving reference input signal pulses.

If there are no reference pulses, (key "ON", engine stopped) the ECM will shut "OFF" the fuel pump relay within 2 seconds.

Test Description:

Numbers below refer to circled numbers on the diagnostic chart.

1. The fuel pump only runs if the inertia switch is closed and operative.
2. Determines if the ECM and fuel pump relay circuit is operating correctly. The ECM should turn "ON" the pump relay. Since the engine is not cranking or running, the ECM will turn "OFF" the relay within 2 seconds after ignition is turned "ON".
3. If the fuse is blown, this test will check for short to ground on CKTWP22D. To prevent misdiagnosis, be sure fuel pump is disconnected and ignition is "OFF" before performing this test.

Diagnostic Aids:

See figures EMK. 4-1 and 4-2 for location of fuses and relays.

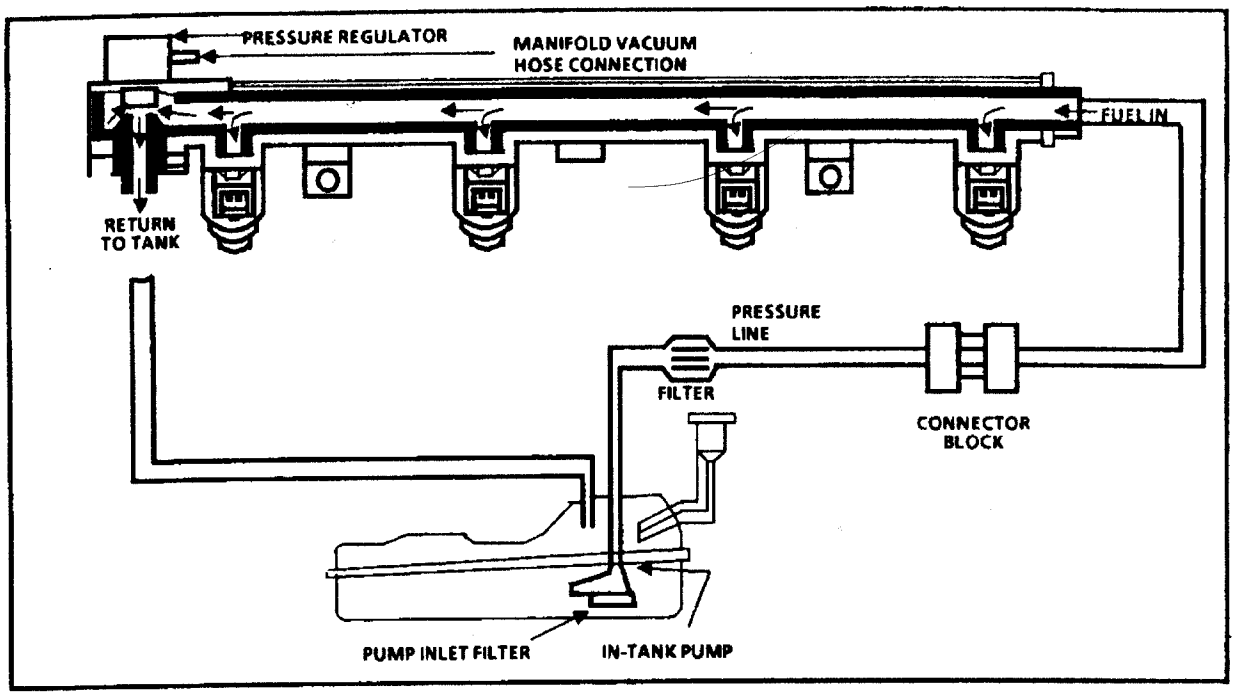

CHART EMK. 4-7

(Page 1 of 2)
FUEL DELIVERY SYSTEM
1.6L TURBO LOTUS ELAN

Circuit Description:

Fuel is drawn from the tank by the electric fuel pump and is fed under pressure through a fuel filter and continues on into the fuel rail and then is injected into the ports through the fuel injectors.

Fuel pressure in the system is governed by the pressure regulator, in such a manner that a certain pressure difference between fuel pressure and inlet manifold pressure is maintained. Excess fuel above the regulated pressure is returned to the fuel tank by the pressure regulator and the fuel return lines.

- Continued on Chart EMK.4-7 (Page 2 of 2) -

Test Description:

Numbers below refer to circled numbers on the diagnostic chart.

1. If the engine does not start, be sure to start with CHART EMK. 4-3 to prevent misdiagnosis.
2. ⑨ is to purge any air from the lines after installing the gauge. It also serves to cool the fuel rail for more accurate pressure testing if the engine is hot. ⑩ is to allow the ECM to "power down", so the next time the ignition is turned "ON", the ECM will energize its fuel pump relay control for 2 seconds. ⑨ & ⑩ indicate what the pressure should do when the ignition is turned "ON". There are two things to note: (A) - pressure reading, and (B) - that the pressure does not continue to drop after the pump stops running.
3. At this point, the regulated pressure should be within specification, and the pressure does not drop when the pump stops running. This check is to see if the pressure regulator will modulate the regulated fuel pressure when the vacuum signal to it changes. During normal engine operation, the regulated pressure can change, based on intake manifold pressure. When the manifold pressure is at its lowest (engine idling), fuel pressure will be at its lowest regulated pressure. When intake manifold pressure is at its highest (wide open throttle), regulated fuel pressure will be at its highest regulated pressure.
4. If the pressure continues to drop after the pump stops running, there is a leak somewhere. Either the check valve in the pump is leaking pressure back into the tank, the regulator has an internal leak allowing fuel to leak from the pressure side to the return side, or an injector is leaking (dripping).

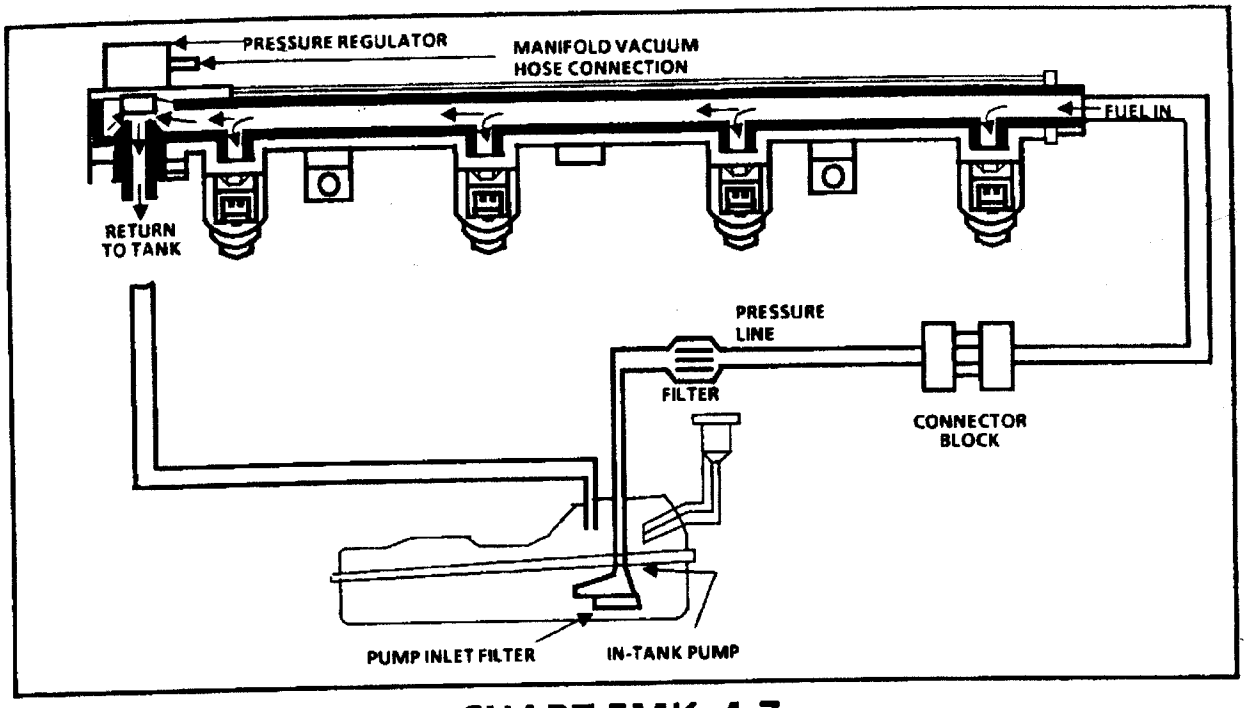

CHART EMK. 4-7

(Page 2 of 2)
FUEL DELIVERY SYSTEM
1.6L TURBO LOTUS ELAN

Circuit Description:

Continued from Chart EMK.4-7 (Page 1 of 2) -

The fuel pump has a check valve in it to maintain pressure at the fuel rail after the pump stops running. The check valve plays an important part in the fuel delivery system: to keep the fuel rail "charged" with fuel after the pump shuts off. When the engine begins cranking to start, there is *no delay* before fuel injection begins, and quick starting is insured. The check valve is part of the fuel pump, and is not serviced seperately.

Test Description:

Numbers below refer to circled numbers on the diagnostic chart.

5. If any fuel lines, fittings, filter, or components are restricted, full pressure cannot be attained.
6. At this point, the pressure checks are OK, but a complete test has not been performed. Return to CHART EMK.4-7 (page 1 of 2) step 3 to complete the testing.
7. When the fuel return hose is pinched shut, there is no pressure regulator control to limit the pressure. The pressure reading will be whatever the fuel pump is capable of producing . This is the same as attaching a pressure gauge directly to the output of the fuel pump. The pressure reading would be a "maximum pressure - no flow" reading, and should be well over 325 kPa.

CHART EMK. 4-7

(Page 1 of 2)
FUEL DELIVERY SYSTEM
1.6L TURBO LOTUS ELAN

THIS CHART ASSUMES THERE IS SUFFICIENT FUEL IN THE TANK.

(1) IF ENGINE CRANKS BUT WON'T RUN, START WITH CHART EMK. 4-3 (1 OF 2).

(2)
- ① - IGNITION "OFF", REMOVE FUEL PUMP RELAY.
- ③ - INSTALL FUEL PRESSURE GAUGE AT PRESSURE LINE CONNECTOR BLOCK (REFER TO SECTION EMK.3-J FOR INSTRUCTIONS).
- ⑤ - JUMPER CKT'S WP22C AND WG22D IGNITION "ON". ALLOW PUMP TO RUN 1 MINUTE. THIS IS TO PURGE THE LINES OF ANY AIR BEFORE PRESSURE TESTING.
- ④ - IGNITION "OFF" FOR 10 SECONDS. REMOVE JUMPER AND RECONNECT RELAY.
- ⑥ - OBSERVE FUEL PRESSURE WHEN IGNITION IS TURNED "ON".
- ⑧ - PRESSURE SHOULD BE 280 - 325 kPa (40 - 47 psi), *& NOT CONTINUE TO DROP* AFTER PUMP STOPS RUNNING. *(Pump should run about 2 seconds, then shut off.) SEE "NOTE.*

***NOTE:** It is normal for the pressure to drop slightly after the pump stops running, but should then hold steady and drop no further.*

If the engine is hot when this pressure test is performed, it is OK if the pressure very slowly begins to rise after the pump stops.

OK

(3)
- DISCONNECT FUEL PUMP RELAY
- JUMPER CKT'S WP22C AND WG22D *AND NOTE FUEL PRESSURE.*
- CONNECT A HAND VACUUM PUMP TO THE REGULATOR VACUUM FITTING, AND APPLY 50 kPa OF VACUUM TO THE REGULATOR.
- NOTE FUEL PRESSURE WITH VACUUM APPLIED TO REGULATOR. IT SHOULD BE AT LEAST 15 kPa *LESS* THAN WHEN NO VACUUM WAS APPLIED.
- IS IT?

YES → NO TROUBLE FOUND

NO → REPLACE PRESSURE REGULATOR

NOT OK

(4) PRESSURE, BUT CONTINUES TO DROP AFTER PUMP STOPS

- IGNITION "OFF" FOR 10 SECONDS.
- IGNITION "ON".
- WHEN THE PUMP STOPS RUNNING (after 2 seconds), AND WHILE THE PRESSURE IS DROPPING, PINCH SHUT THE TEST HOSE.
- PRESSURE NOW HOLDS ?

YES → CHECK FOR LEAKS IN THE "PRESSURE-SIDE" OF THE FUEL SYSTEM. IF OK, REPLACE FUEL PUMP.

NO → CHECK FOR LEAKING INJECTORS, IF OK REPLACE REGULATOR

HOLDS PRESSURE BUT LESS THAN 280 kPa (40 psi) -OR- MORE THAN 325 kPa (47 psi)

SEE CHART EMK. 4-7 (PAGE 2 OF 2)

NO PRESSURE

CHECK FOR:
- FUEL PRESSURE LINE RESTRICTED BETWEEN PUMP AND TEST POINT.
- FUEL SUPPLY LINE BETWEEN TANK AND PUMP EITHER RESTRICTED -OR- LEAKING (sucking air).
- RESTRICTED FUEL FILTER.
- RESTRICTED IN-TANK FUEL STRAINER.
- DEFECTIVE FUEL PUMP.

CLEAR CODES AND CONFIRM NO "CHECK ENGINE" LIGHT

CHART EMK. 4-7

(Page 2 of 2)

FUEL DELIVERY SYSTEM 1.6L TURBO LOTUS ELAN

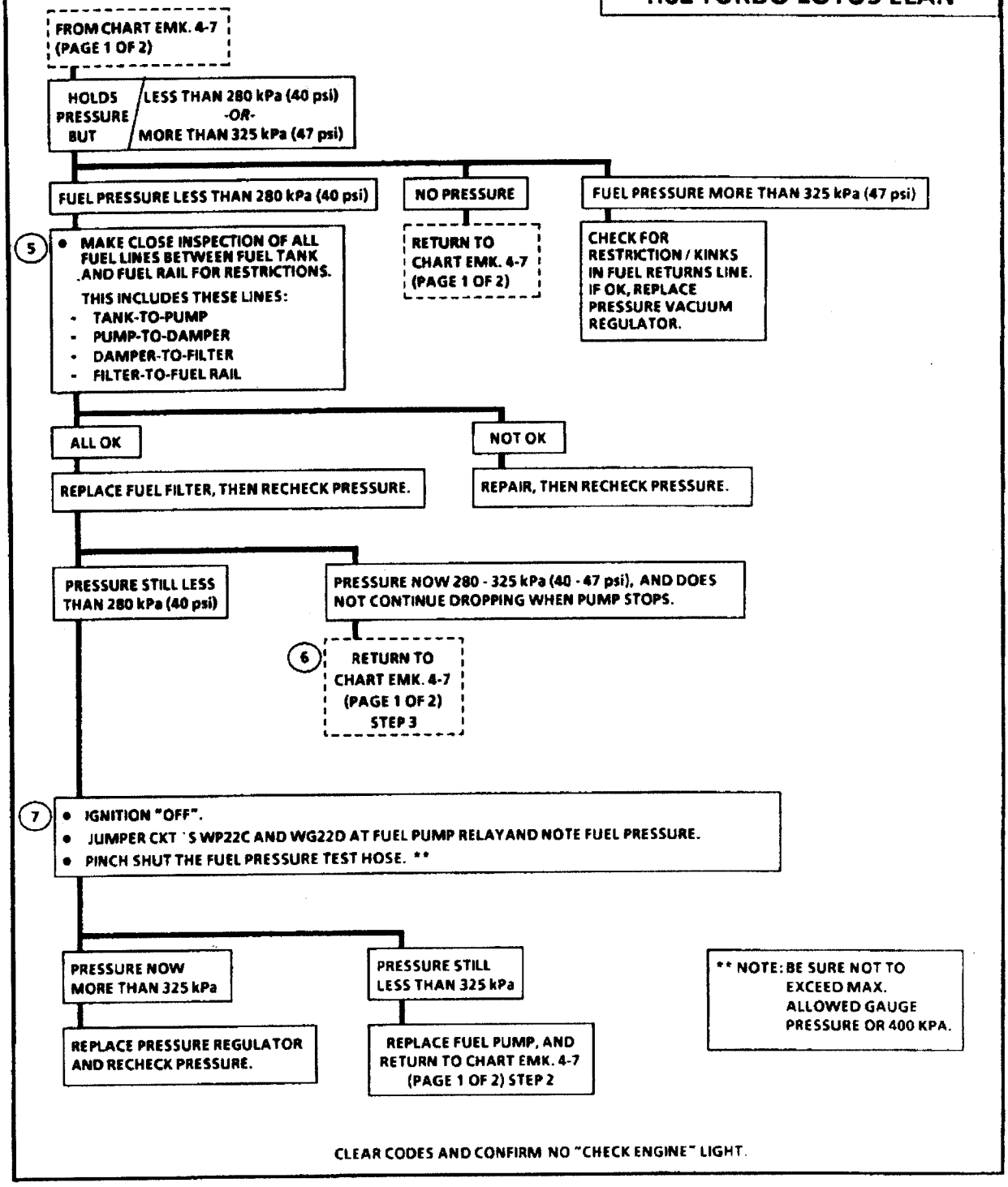

CLEAR CODES AND CONFIRM NO "CHECK ENGINE" LIGHT.

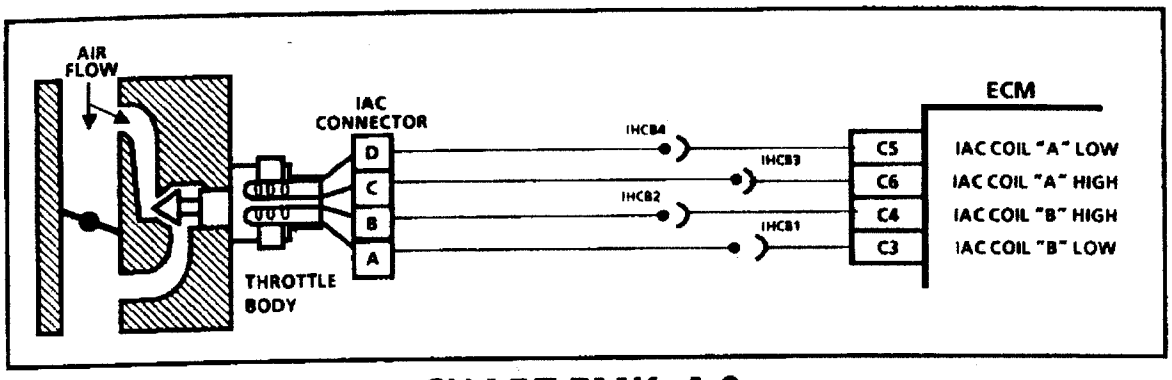

CHART EMK. 4-9

IDLE SPEED ERROR
1.6L TURBO LOTUS ELAN

Circuit Description:

This chart should be used, when the closed throttle engine speed is 50 rpm above or below the desired idle speed for 20 seconds with engine fully warmed up and idle speed stabilized for at least 20 seconds. The ECM controls idle rpm with the IAC valve. To increase idle rpm, the ECM moves the IAC valve in, allowing more air to bypass the throttle plate. To decrease rpm, it moves the IAC valve out, reducing air flow by- passing the throttle plate. The Tech 1 will read the ECM commands to the IAC valve in counts. The higher the counts, the more air allowed (higher idle). The lower the counts, the less air allowed (lower idle).

Test Description:

Numbers below refer to circled numbers on the diagnostic chart.

1. Run test, even if engine will not idle. If idle is too low, the Tech 1 will display 80 or more counts, or steps. If idle is high, it will display "5" counts or less. Occasionally an erratic or unstable idle may occur. Engine speed may vary 200 rpm or more up and down. Disconnect IAC. If the condition is unchanged, the IAC is not at fault.
2. When the engine was stopped, the IAC Valve retracted (more air) to a fixed "Park" position for increased air flow and idle speed during the next engine start. The Tech 1 will display 80 counts on engine stopped, ignition "ON".
3. The IAC valve should extend as the ECM commands idle speed to decrease to desired rpm.
4. The test light will confirm the ECM signals by a steady or flashing light on all circuits.
5. There is a remote possibility that one of the circuits is shorted to voltage, which would have been indicated by a steady light. Disconnect the ECM and turn the ignition "ON" and probe terminals to check for this condition.

Diagnostic Aids:

A slow unstable idle may be caused by a system problem that cannot be overcome by the IAC.
Tech 1 counts will be above 60 counts if idle is too low, and "5" counts if idle is too high. If idle speed is excessively high, check for and correct any trouble code problem or vacuum leak.

- System too lean
  Idle speed may be too high or too low. Engine speed may vary up and down, disconnecting IAC does not help. Check fuel pressure and CO emissions.
- System too rich
  Idle speed too low. Tech 1 counts usually above 80. System obviously rich and may exhibit black smoke exhaust.
  Check : - CO emissions
  - High fuel pressure
  - Injector leaking or sticking
- Intake Manifold - Remove IAC and inspect bore for foreign material or evidence of IAC valve seat or pintle damage.
- Refer to "Rough, Unstable, Incorrect Idle or Stalling" in "Symptoms" in Section EMK. 6.
- Check (wiggle) IAC pins at ECM and valve while watching "IDLE AIR CONTROL" on TECH 1 display. Should be fairly stable.
- A faulty TPS or TPS circuit causes unstable or elevated idle speed.

CHART EMK. 4-9

IDLE SPEED ERROR 1.6L TURBO LOTUS ELAN

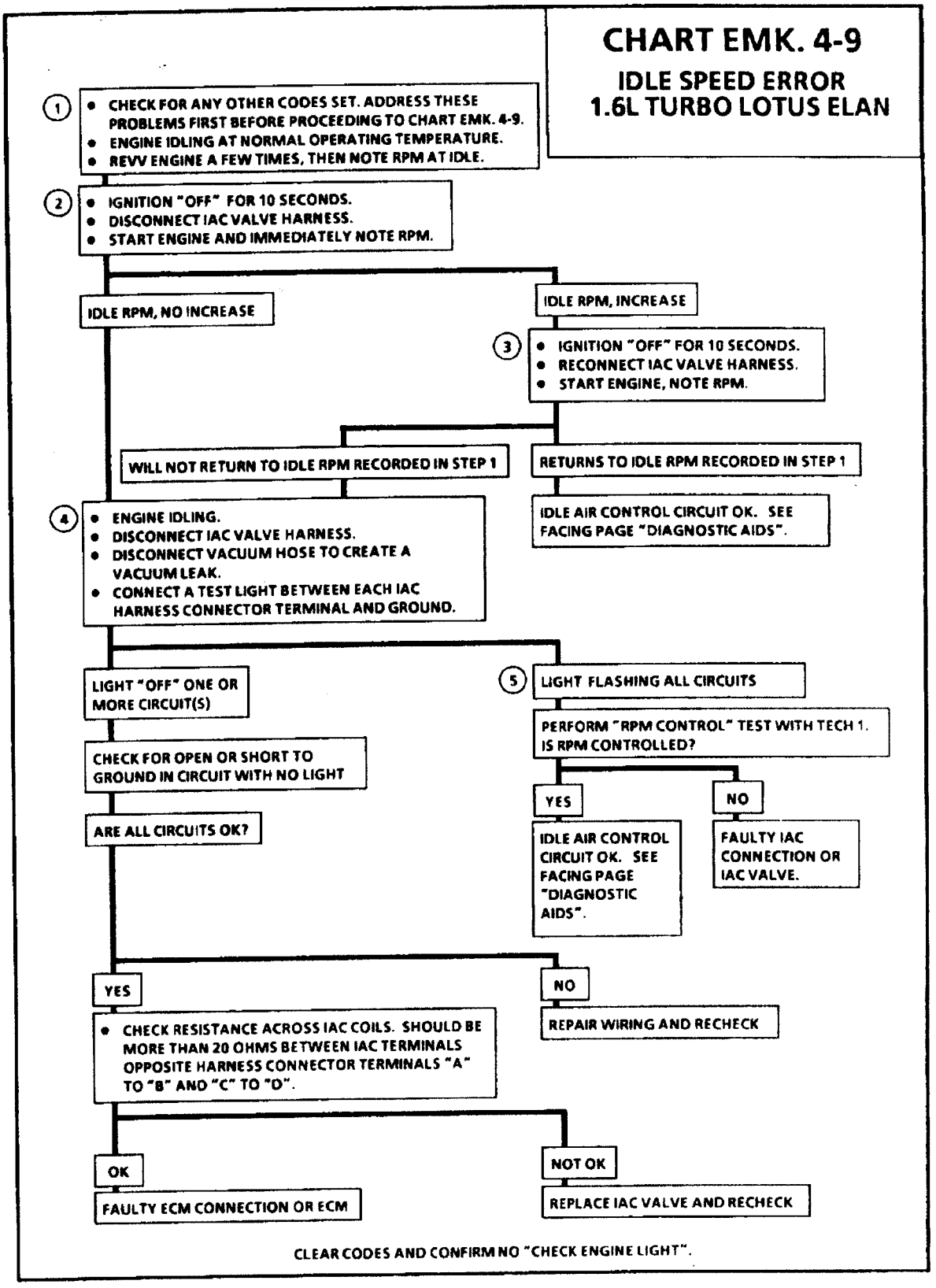

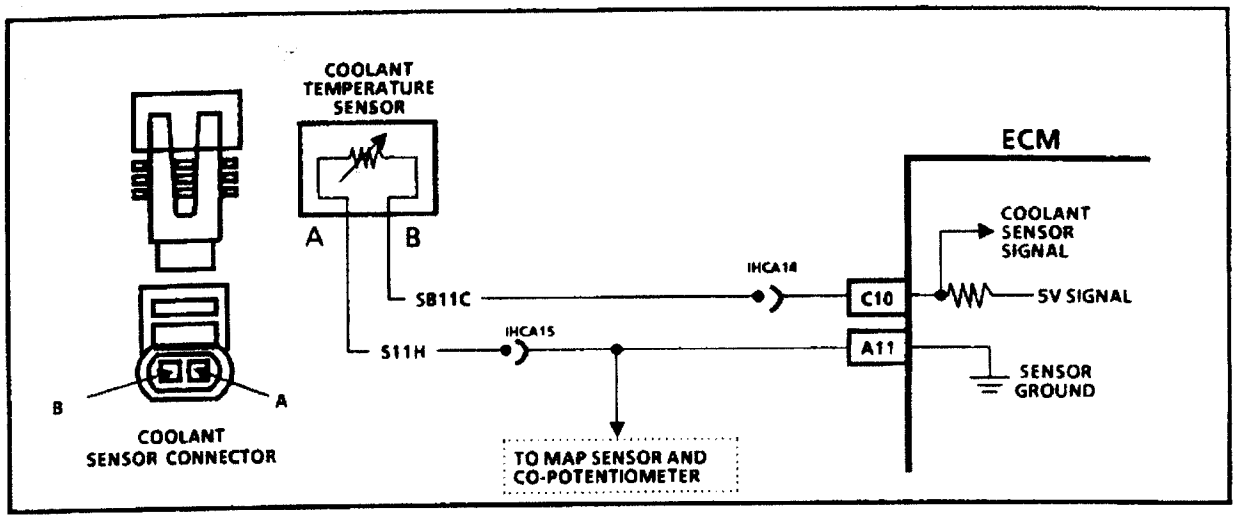

CODE 14

COOLANT TEMPERATURE SENSOR CIRCUIT
(SIGNAL VOLTAGE LOW - HIGH TEMPERATURE INDICATED)
1.6L TURBO LOTUS ELAN

Circuit Description:

The Coolant Temperature Sensor uses a thermistor to control the signal voltage at the ECM. The ECM applies a voltage on CKT SB11C to the sensor. When the engine is cold, the sensor (thermistor) resistance is high, therefore, the ECM will see high signal voltage.

As the engine warms, the sensor resistance becomes less, and the voltage drops. At normal engine operating temperature, the voltage will measure about 1.0 to 2.4 volts at the ECM terminal "C10".

Coolant temperature is one of the inputs used to control:

- Fuel delivery
- Engine Spark Timing (EST)
- Idle (IAC)
- Exhaust Gas Recirculation (EGR)
- Secondary Throttles
- Boost Control
- Air Conditioning

Test Description:

Numbers below refer to circled numbers on the diagnostic chart.

1. Checks to see if code was set as result of hard failure or intermittent condition.
   Code 14 will set if:
   - Engine has been running for 2 minutes.
   - Signal Voltage indicates a coolant temperature above 145°C (275°F).
2. This test simulates conditions for a Code 15. If the ECM recognizes the open circuit (high voltage), and displays a low temperature, the ECM and wiring are OK.

Diagnostic Aids:

Check harness routing for a potential short to ground in SB11C.

The Tech 1 displays engine temperature in degrees celcius. After engine is started, the temperature should rise steadily to about 87°C, and then stabilize when thermostat opens.

Verify that engine is not overheating and has not been subjected to conditons which could create an overheating condition (i.e. overload, trailer towing, hilly terrain, heavy stop and go traffic, etc.). The "Temperature To Resistance Value" scale at the right may be used to test the coolant sensor at various temperature levels to evaluate the possibility of a "shifted" (mis-scaled) sensor. A "shifted" sensor could result in poor driveability complaints.

If Code 14 is intermittent:

- Check (wiggle) ECM connector pins C10 and A11, sensor wires and connector while watching "COOLANT TEMP on TECH1 display. Temperature should be stable.
- Clear Code and conduct a test drive with TECH 1 in "Snapshot" mode. Set trigger on Code 14.
- Refer to "Intermittents" in Section EMK.6.

CODE 14

COOLANT TEMPERATURE SENSOR CIRCUIT
(SIGNAL VOLTAGE LOW - HIGH TEMPERATURE INDICATED)
1.6L TURBO LOTUS ELAN

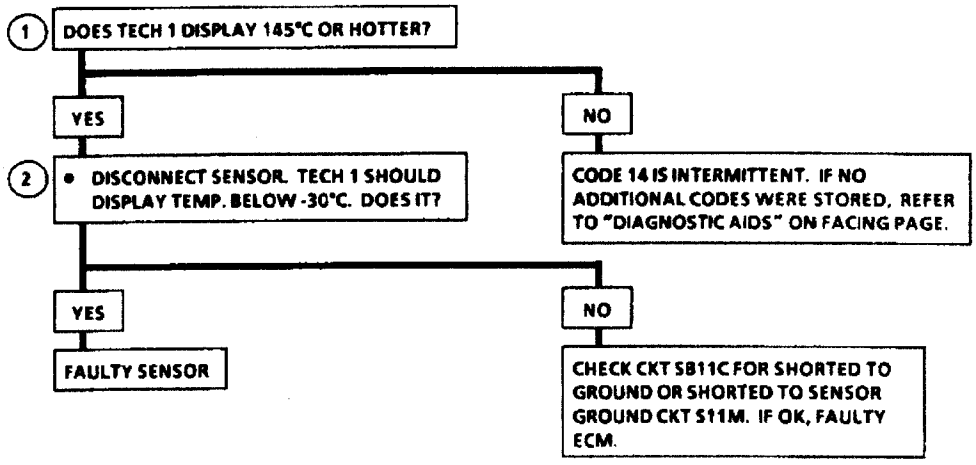

DIAGNOSTIC AID

COOLANT SENSOR		
TEMPERATURE TO RESISTANCE VALUES (APPROXIMATE)		
°F	°C	OHMS
210	100	185
160	70	450
100	38	1,800
70	20	3,400
40	4	7,500
20	-7	13,500
0	-18	25,000
-40	-40	100,700

CLEAR CODES AND CONFIRM NO "CHECK ENGINE" LIGHT.

CODE 14

COOLANT TEMPERATURE SENSOR CIRCUIT
(SIGNAL VOLTAGE LOW - HIGH TEMPERATURE INDICATED)
1.6L TURBO LOTUS ELAN

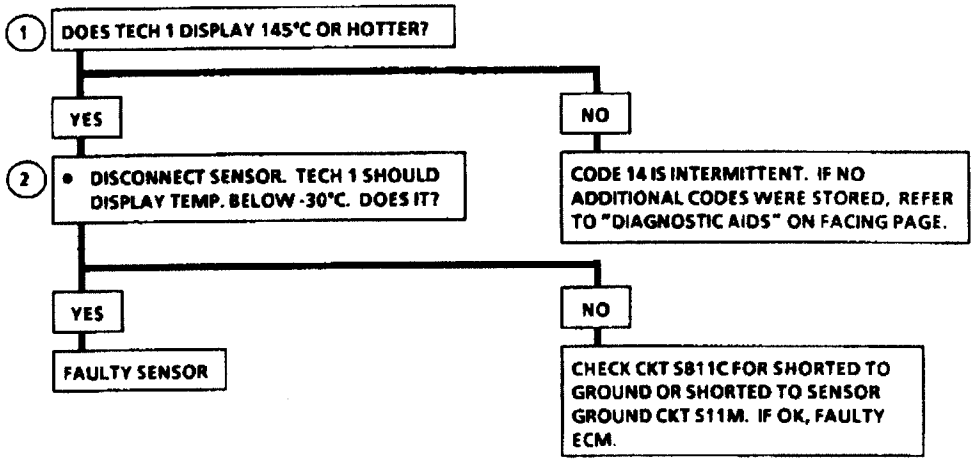

DIAGNOSTIC AID

COOLANT SENSOR		
TEMPERATURE TO RESISTANCE VALUES (APPROXIMATE)		
°F	°C	OHMS
210	100	185
160	70	450
100	38	1,800
70	20	3,400
40	4	7,500
20	-7	13,500
0	-18	25,000
-40	-40	100,700

CLEAR CODES AND CONFIRM NO "CHECK ENGINE" LIGHT.

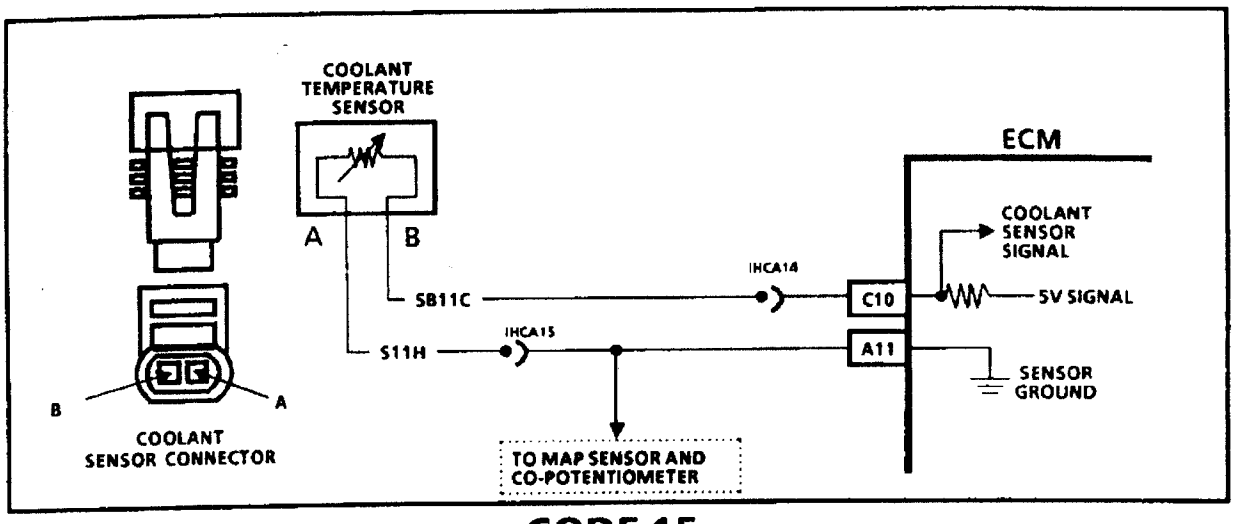

CODE 15

COOLANT TEMPERATURE SENSOR CIRCUIT
(SIGNAL VOLTAGE HIGH - LOW TEMPERATURE INDICATED)
1.6L TURBO LOTUS ELAN

Circuit Description:

The Coolant Temperature Sensor uses a thermistor to control the signal voltage at the ECM. The ECM applies a voltage on CKT SB11C to the sensor. When the engine is cold, the sensor (thermistor) resistance is high, therefore, the ECM will see high signal voltage.

As the engine warms, the sensor resistance becomes less, and the voltage drops. At normal engine operating temperature, the voltage will measure about 1.0 to 2.4 volts at the ECM terminal "C10".

Coolant temperature is one of the inputs used to control:

- Fuel delivery
- Engine Spark Timing (EST)
- Idle (IAC)
- Exhaust Gas Recirculation (EGR)
- Secondary Throttles
- Boost Control
- Air Conditioning

Test Description:

Numbers below refer to circled numbers on the diagnostic chart.

1. Checks to see if code was set as result of hard failure or intermittent condition.
   Code 15 will set if:
   - The engine has been running for 1 minute.
   - Signal Voltage indicates a coolant temperature below -37°C.
2. This test simulates conditions for a Code 14. If the ECM recognizes the grounded circuit (low voltage), and displays a high temperature, the ECM and wiring are OK.
3. This test will determine if there is a wiring problem or a faulty ECM. If CKT S11H is open, there may also be a Code 33 stored. Be sure to carefully check terminals at the engine harness connectors.

Diagnostic Aids:

The Tech 1 displays engine temperature in degrees celsius. After engine is started the temperature should rise steadily to about 82°C, and then stabilize when thermostat opens.

A faulty connection or an open in CKT SB11C or CKT S11H can result in a Code 15.

Codes 15 and 33 stored at the same time could be the result of an open CKT IHCA15.

The " Temperature to Resistance Value" scale at the right may be used to test the coolant sensor at various temperature levels to evaluate the possibility of a "shifted" (mis-scaled) sensor. A "shifted" sensor could result in poor driveability complaints.

If Code 15 is intermittent:

- Check (wiggle) ECM connector pins C10 and A11, sensor wires and connector while watching "COOLANT TEMP" on Tech 1 display. Temperature should be stable.
- Clear Code and conduct a test drive with Tech 1 in "Snapshot" mode. Set trigger on Code 15.
- Refer to "Intermittents" in Section EMK.6.

CODE 15

COOLANT TEMPERATURE SENSOR CIRCUIT
(SIGNAL VOLTAGE HIGH - LOW TEMPERATURE INDICATED)
1.6L TURBO LOTUS ELAN

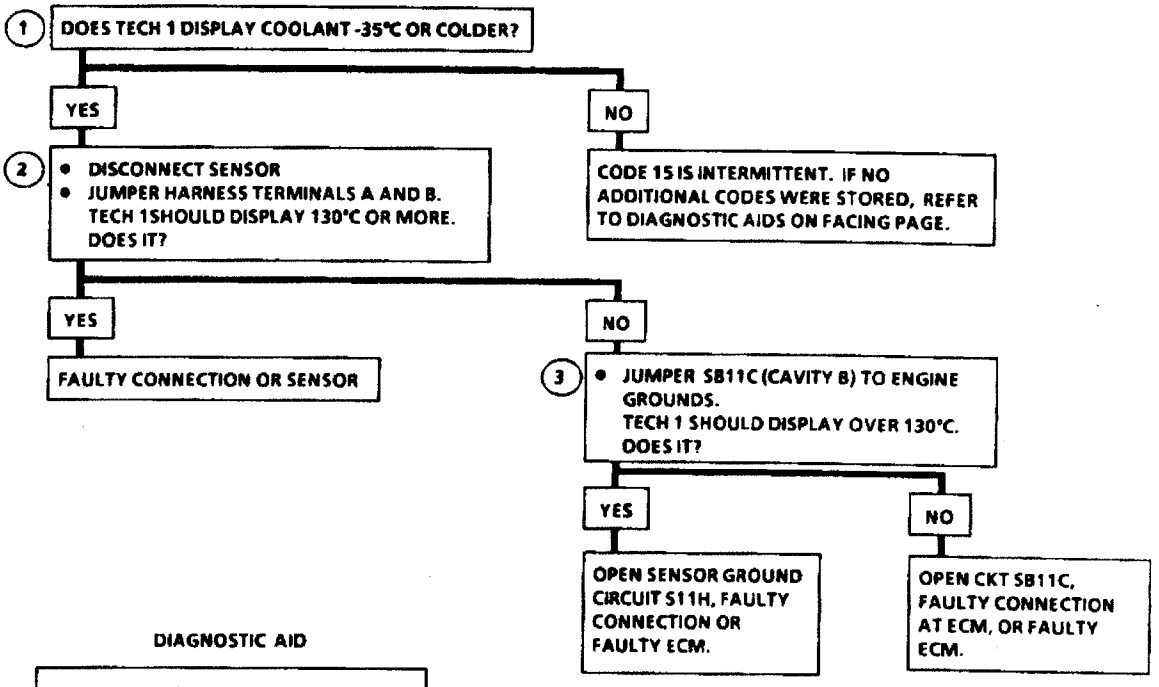

DIAGNOSTIC AID

COOLANT SENSOR		
TEMPERATURE TO RESISTANCE VALUES (APPROXIMATE)		
°F	°C	OHMS
210	100	185
160	70	450
100	38	1,800
70	20	3,400
40	4	7,500
20	-7	13,500
0	-18	25,000
-40	-40	100,700

CLEAR CODES AND CONFIRM NO "CHECK ENGINE" LIGHT.

CODE 21

THROTTLE POSITION SENSOR (TPS) CIRCUIT (SIGNAL VOLTAGE HIGH) 1.6L TURBO LOTUS ELAN

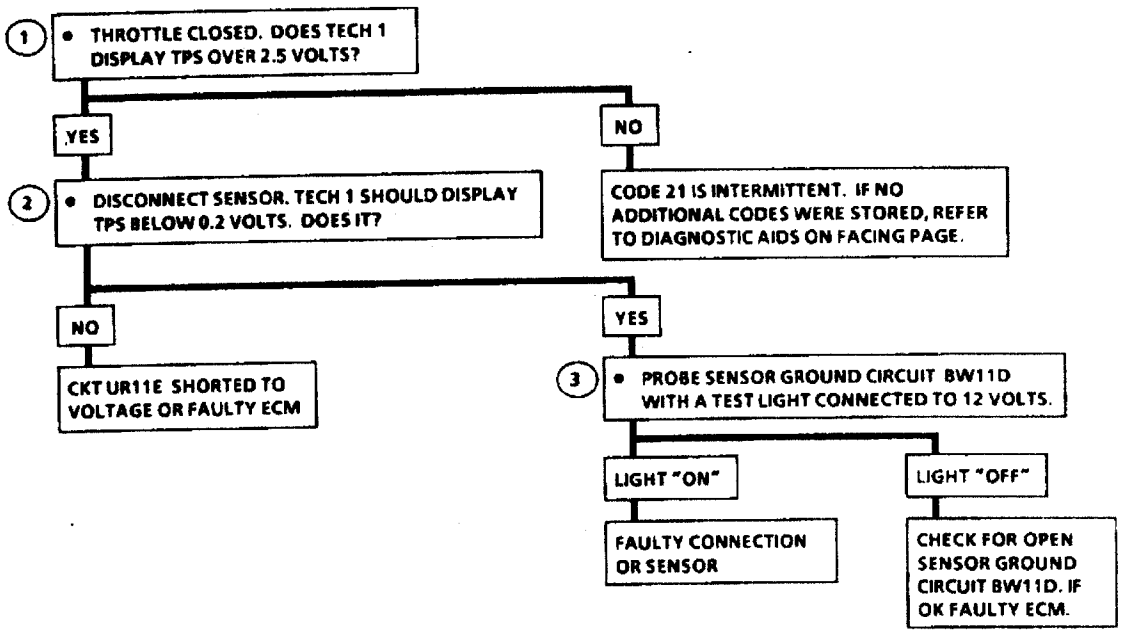

CLEAR CODES AND CONFIRM NO "CHECK ENGINE" LIGHT.

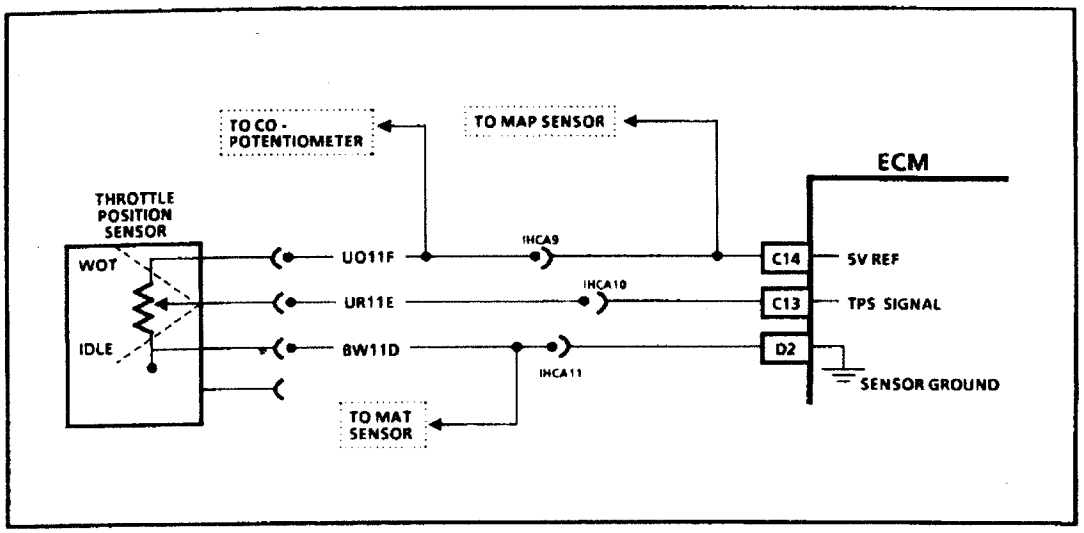

CODE 22

THROTTLE POSITION SENSOR (TPS) CIRCUIT
(SIGNAL VOLTAGE LOW)
1.6L TURBO LOTUS ELAN

Circuit Description:

The Throttle Position Sensor (TPS) provides a voltage signal that changes, relative to the throttle valve position. Signal voltage will vary from 0.4 ± 0.02 volts at idle to about 4.0 volts at wide open throttle (WOT).

The TPS signal is one of the most important inputs used by the ECM for fuel control and for many of the ECM controlled outputs.

Test Description:

Numbers below refer to circled numbers on the diagnostic chart.

1. This step checks to see if Code 22 is the result of a hard failure or an intermittent condition.
   A Code 22 will set if:
   - The engine is running.
   - TPS voltage is below .20 volts.
2. This step simulates conditions for a Code 21. If a Code 21 is set, or the Tech 1 tool displays over 4 volts, the ECM and wiring are OK.
3. The Tech 1 does not display 12 volts. The important thing is that the ECM recognizes the voltage as over 4 volts, indicating that CKT UR11E and the ECM are OK.
4. If CKT UO11F is open or shorted to ground, there may also be a stored Code 34.
5. An internally shorted MAP sensor can pull down 5V REF voltage.

Diagnostic Aids:

Scan TPS while depressing accelerator pedal with engine stopped and ignition "ON". Display should vary from about 0.40 ± 0.02 volt when throttles is closed, to about 4.0 volt when throttle is held wide open.

Also, Tech 1 will display throttle angle %:
0% = closed throttle; >95% = WOT

Should check condition of connector and sensor terminals for corrosion, and clean and/or replace as necessary. If corrosion is found, check condition of connector seal and repair or replace if necessary.

If Code 22 is intermittent:

- Check (wiggle) ECM connector pins C14, C13, D2, sensor wires and connector while watching "THROT POSITION" on Tech1 display. Voltage should be constant.
- Clear Code and conduct test drive with Tech 1 in "Snapshot" mode. Set trigger on Code 22.
- Refer to "Intermittents" in Section EMK.6.

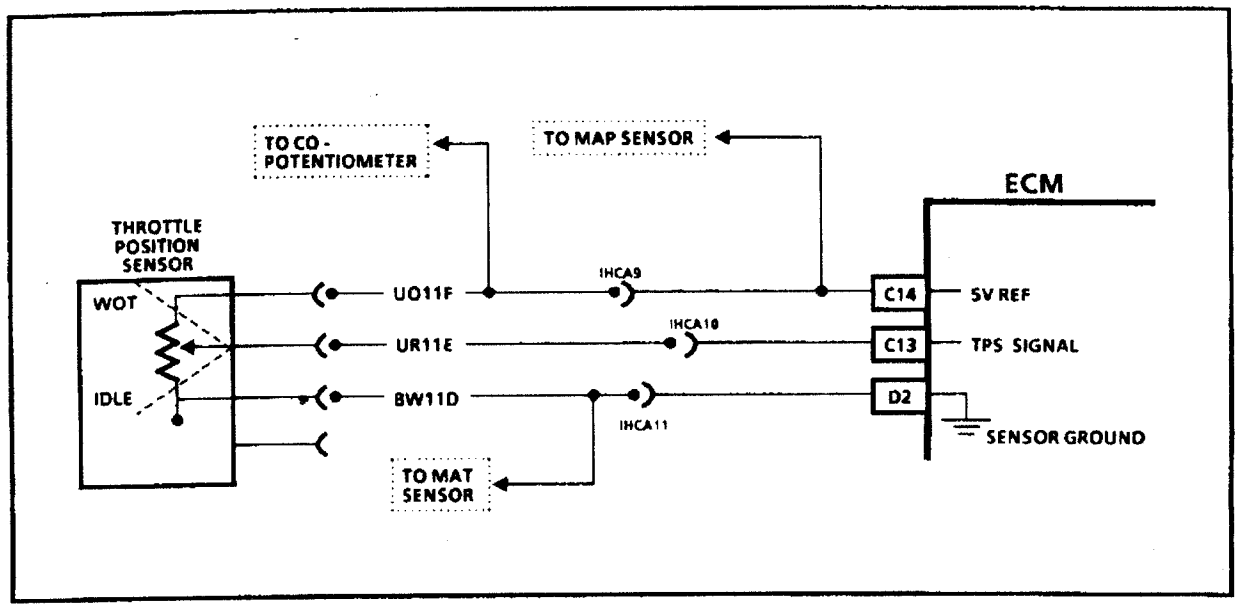

CODE 22

THROTTLE POSITION SENSOR (TPS) CIRCUIT
(SIGNAL VOLTAGE LOW)
1.6L TURBO LOTUS ELAN

Circuit Description:

The Throttle Position Sensor (TPS) provides a voltage signal that changes, relative to the throttle valve position. Signal voltage will vary from 0.4 ± 0.02 volts at idle to about 4.0 volts at wide open throttle (WOT).

The TPS signal is one of the most important inputs used by the ECM for fuel control and for many of the ECM controlled outputs.

Test Description:

Numbers below refer to circled numbers on the diagnostic chart.

1. This step checks to see if Code 22 is the result of a hard failure or an intermittent condition.
   A Code 22 will set if:
   - The engine is running.
   - TPS voltage is below .20 volts.
2. This step simulates conditions for a Code 21. If a Code 21 is set, or the Tech 1 tool displays over 4 volts, the ECM and wiring are OK.
3. The Tech 1 does not display 12 volts. The important thing is that the ECM recognizes the voltage as over 4 volts, indicating that CKT UR11E and the ECM are OK.
4. If CKT UO11F is open or shorted to ground, there may also be a stored Code 34.
5. An internally shorted MAP sensor can pull down 5V REF voltage.

Diagnostic Aids:

Scan TPS while depressing accelerator pedal with engine stopped and ignition "ON". Display should vary from about 0.40 ± 0.02 volt when throttles is closed, to about 4.0 volt when throttle is held wide open.

Also, Tech 1 will display throttle angle %:
0% = closed throttle; >95% = WOT

Should check condition of connector and sensor terminals for corrosion, and clean and/or replace as necessary. If corrosion is found, check condition of connector seal and repair or replace if necessary.

If Code 22 is intermittent:

- Check (wiggle) ECM connector pins C14, C13, D2, sensor wires and connector while watching "THROT POSITION" on Tech1 display. Voltage should be constant.
- Clear Code and conduct test drive with Tech 1 in "Snapshot" mode. Set trigger on Code 22.
- Refer to "Intermittents" in Section EMK.6.

CODE 22

THROTTLE POSITION SENSOR (TPS) CIRCUIT (SIGNAL VOLTAGE LOW) 1.6L TURBO LOTUS ELAN

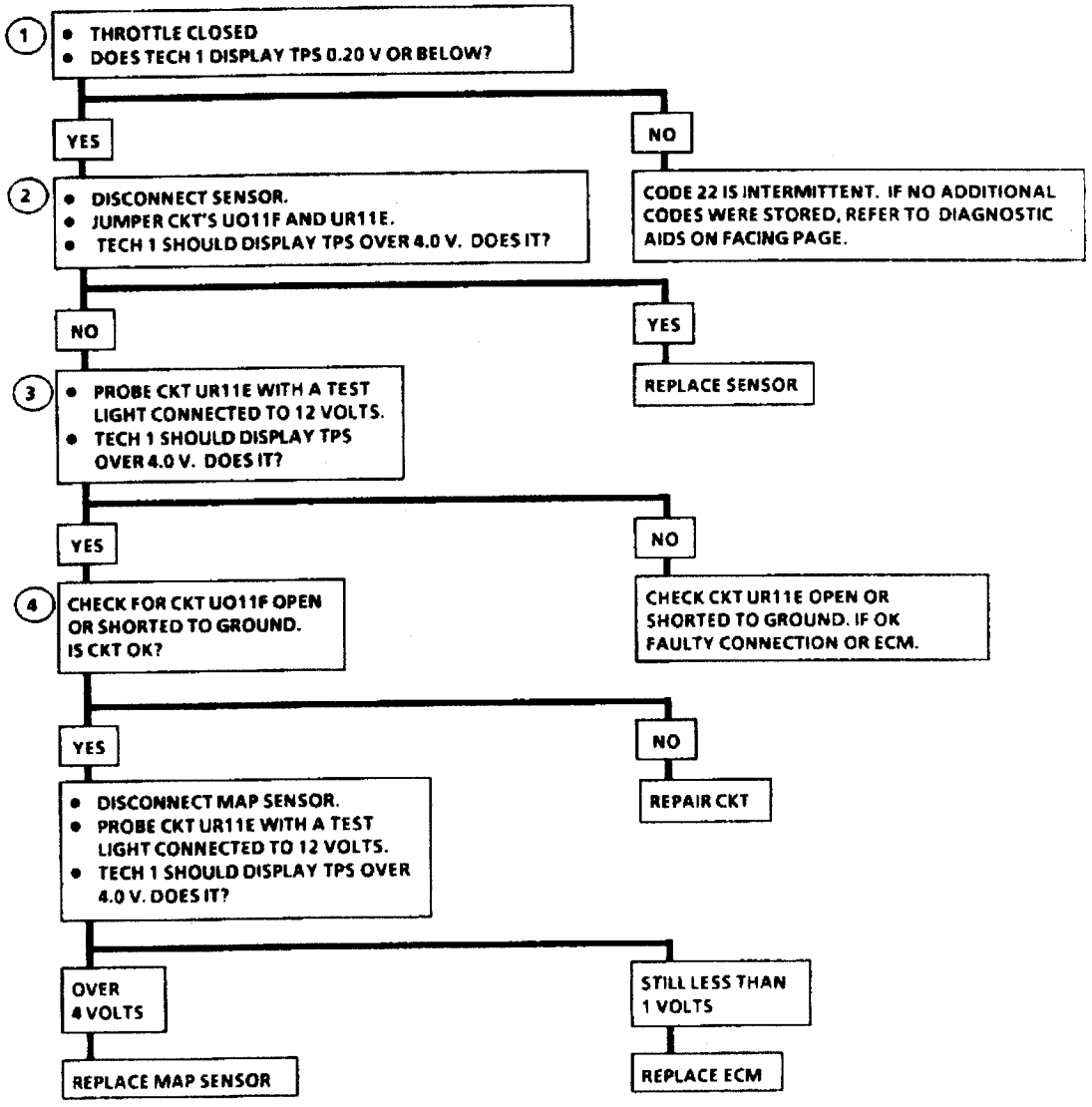

CLEAR CODES AND CONFIRM NO "CHECK ENGINE" LIGHT.

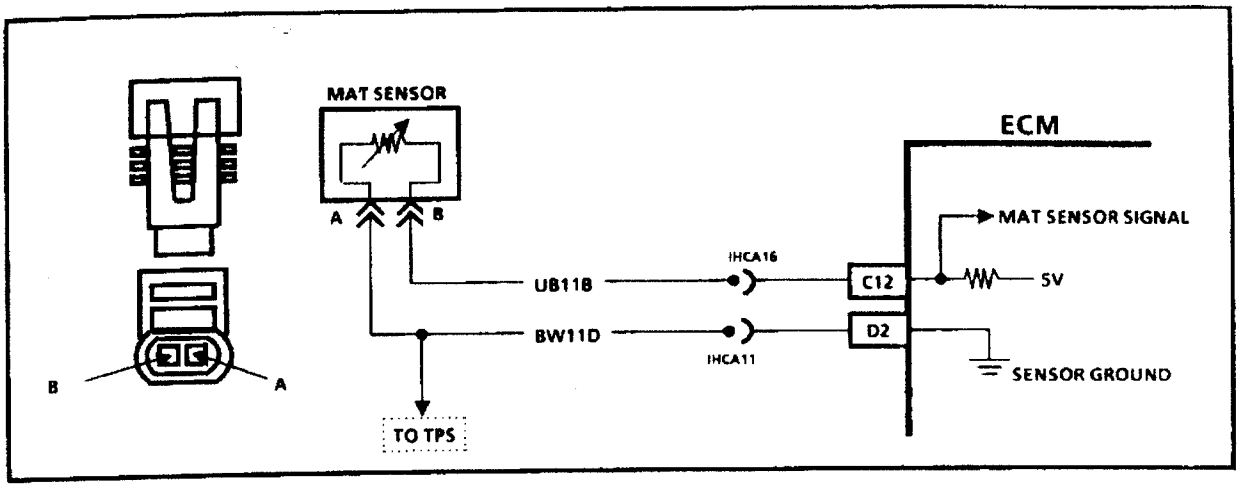

CODE 23

MANIFOLD AIR TEMPERATURE (MAT) SENSOR CIRCUIT
(LOW TEMPERATURE INDICATED)
1.6L TURBO LOTUS ELAN

Circuit Description:

The Manifold Air Temperature Sensor uses a thermistor to control the signal voltage to the ECM. The ECM applies a voltage of about 5 volts on CKT UB11B to the sensor. When manifold air is cold, the sensor (thermistor) resistance is high, therefore, the ECM will see a high signal voltage. As the air warms, the sensor resistance becomes less and the voltage drops.

Test Description:

Numbers below refer to circled numbers on the diagnostic chart.

1. This step checks to see if Code 23 is the result of a hard failure or an intermittent condition.
   A Code 23 will set if:
   - Signal voltage indicates a MAT temperature less than -38°C.
   - Engine is running for longer than 1 minute.
2. This test simulates conditions for a Code 25. If the Tech 1 tool displays a high temperature, the ECM and wiring are ok.
3. This step checks continuity of CKT's UB11B and BW11D. If CKT BW11D is open there may also be a Code 21.

Diagnostic Aids:

The Tech 1 displays temperature of the air entering the engine, which should be close to ambient air temperature, when engine is cold, and rise as underhood temperature increases.

A faulty connection, or an open in CKT UB11B or CKT BW11D can result in a Code 23.

Codes 23 an 21 stored at the same time, could be the result of an open CKT BW11D. The "Temperature to Resistance Values" scale at the right may be used to test the MAT sensor at various temperature levels to evaluate the possibility of a "slewed" (mis-scaled) sensor. A "slewed" sensor could result in poor driveability complaints.

If Code 23 is intermittent:

- Check (wiggle) ECM connector pins C12, D2, sensor wires and connector while watching "MASS AIR TEMP" on Tech 1 display. Temperature should be constant.
- Clear Code and conduct test drive with Tech 1 in "Snapshot" mode while watching "MASS AIR TEMP".
- Refer to "Intermittents" in Section EMK.6.

CODE 23

MANIFOLD AIR TEMPERATURE (MAT) SENSOR CIRCUIT
(LOW TEMPERATURE INDICATED)
1.6L TURBO LOTUS ELAN

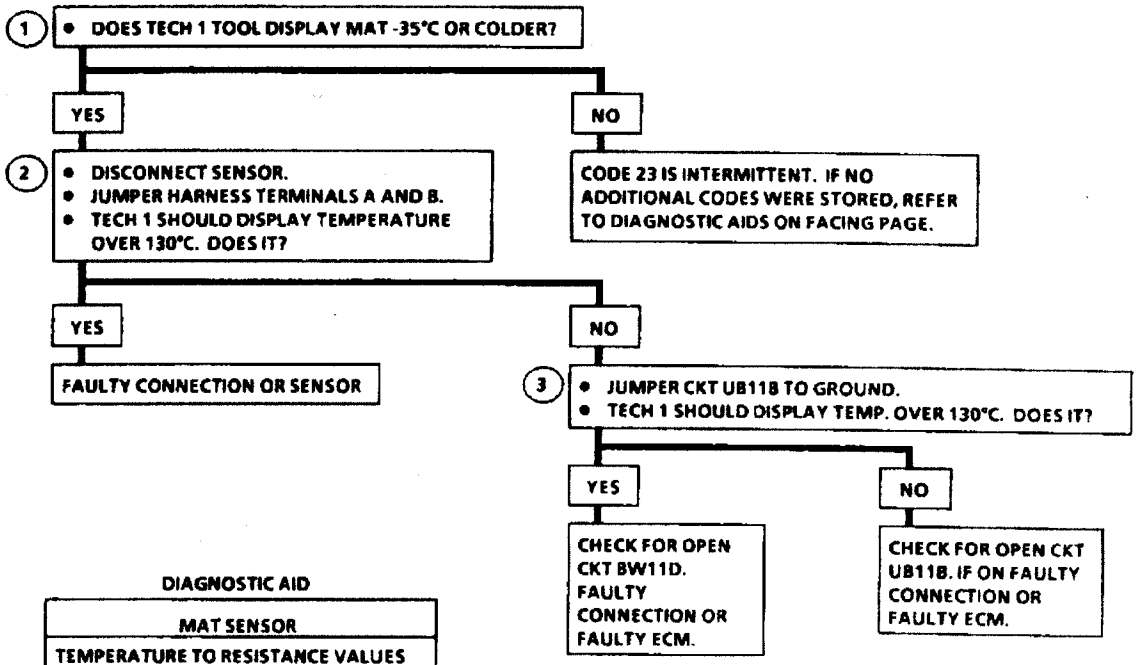

DIAGNOSTIC AID

MAT SENSOR		
TEMPERATURE TO RESISTANCE VALUES (APPROXIMATE)		
°F	°C	OHMS
210	100	185
160	70	450
100	38	1,800
70	20	3,400
40	4	7,500
20	-7	13,500
0	-18	25,000
-40	-40	100,700

CLEAR CODES AND CONFIRM NO "CHECK ENGINE" LIGHT.

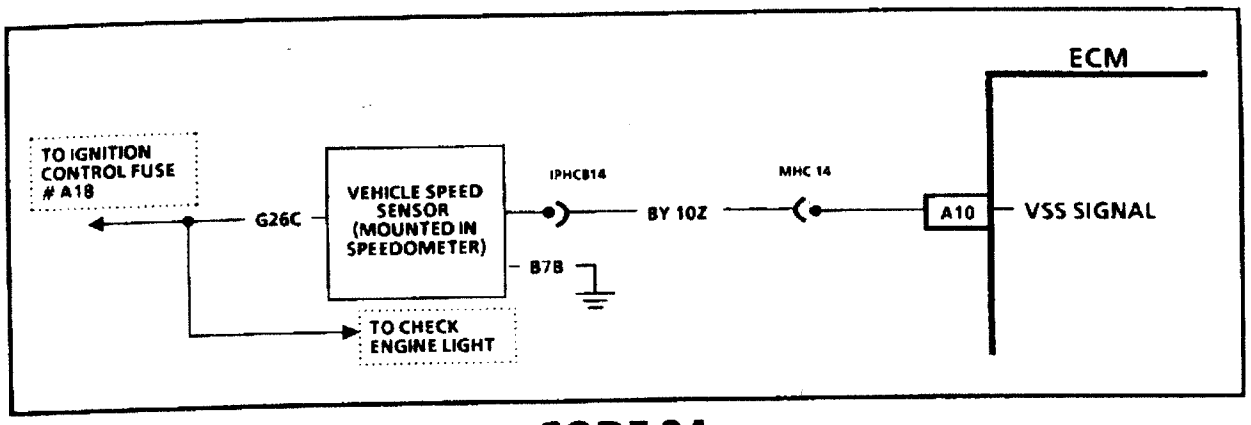

CODE 24

VEHICLE SPEED SENSOR (VSS) CIRCUIT
1.6L TURBO LOTUS ELAN

Circuit Description:

Vehicle speed information is provided to the ECM by the vehicle speed sensor which is an optical device mounted in the back of the speedometer head. The VSS driven by the tacho cable produces electrical pulses which the ECM the uses to calculate mph or kph.

Test Description:

Numbers below refer to circled numbers on the diagnostic chart.

1. Code 24 will set if vehicle speed is less than 2 mph when:
   - Engine speed is between 2400 and 4400 rpm.
   - MAP signal is less than 20 kPa.
   - All conditions met for 10 seconds.
   - No Code 21, 22, 33 or 34.

   These conditons are met during a road load operation. Disregard Code 24 that sets when drive wheels are not turning.

Diagnostic Aids:

Tech 1 should indicate a vehicle speed whenever drive wheels are turning greater than 1 mph.

Check CKT's BY10Z, G26C and B7B for proper connections. Be sure they are clean and tight and the harness is routed correctly.

If Code 24 is intermittent:

- Clear Code and conduct test drive with TECH 1 in "Snapshot" mode watching "MPH KPH" display. Vehicle speed displayed on TECH 1 should always be approx. speedometer reading.
- Refer to "Intermittents" in Section EMK.6.

CODE 24

VEHICLE SPEED SENSOR (VSS) CIRCUIT 1.6L TURBO LOTUS ELAN

DISREGARD CODE 24, IF SET WHILE DRIVE WHEELS ARE NOT TURNING.

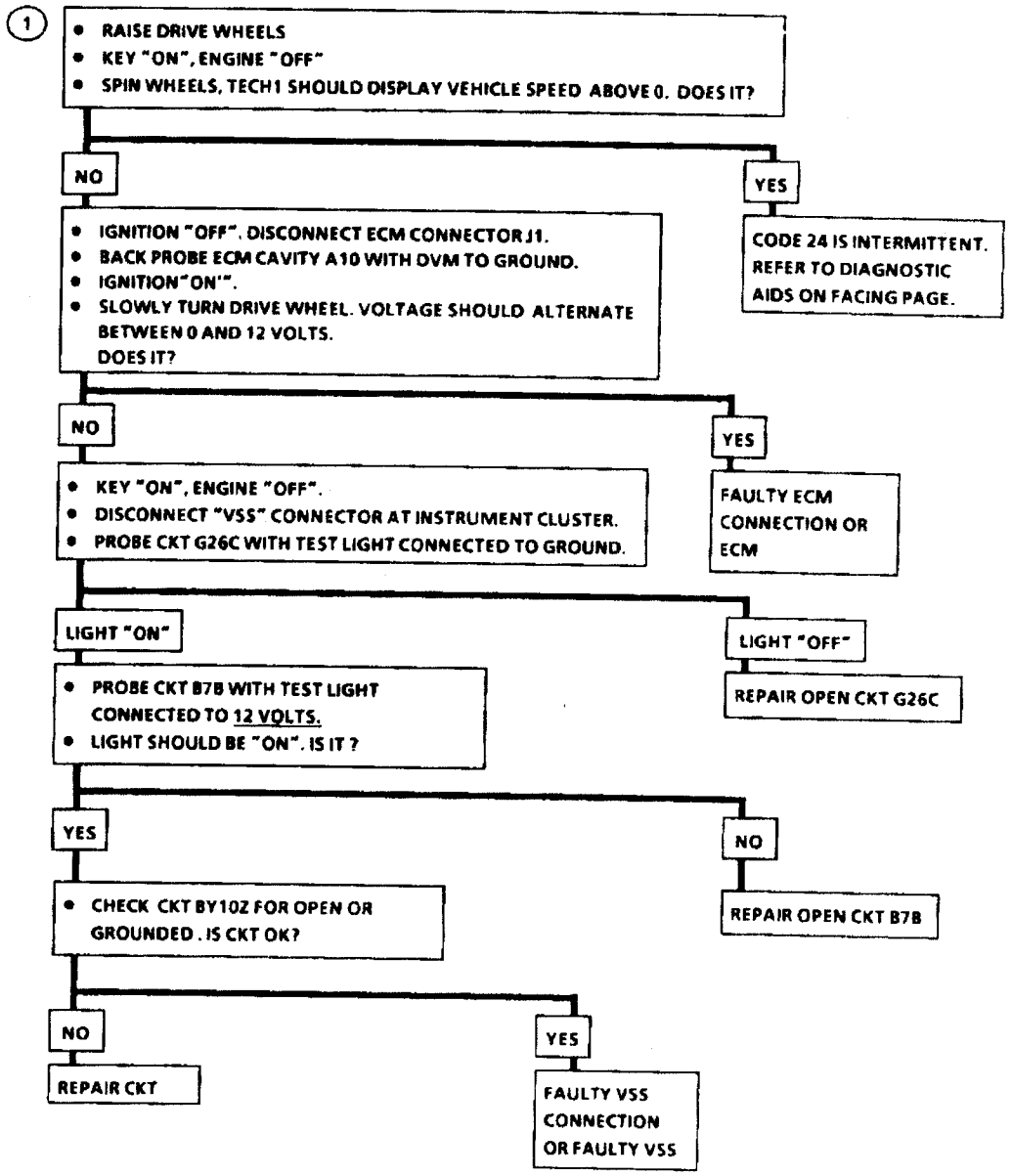

CLEAR CODES AND CONFIRM NO "CHECK ENGINE" LIGHT.

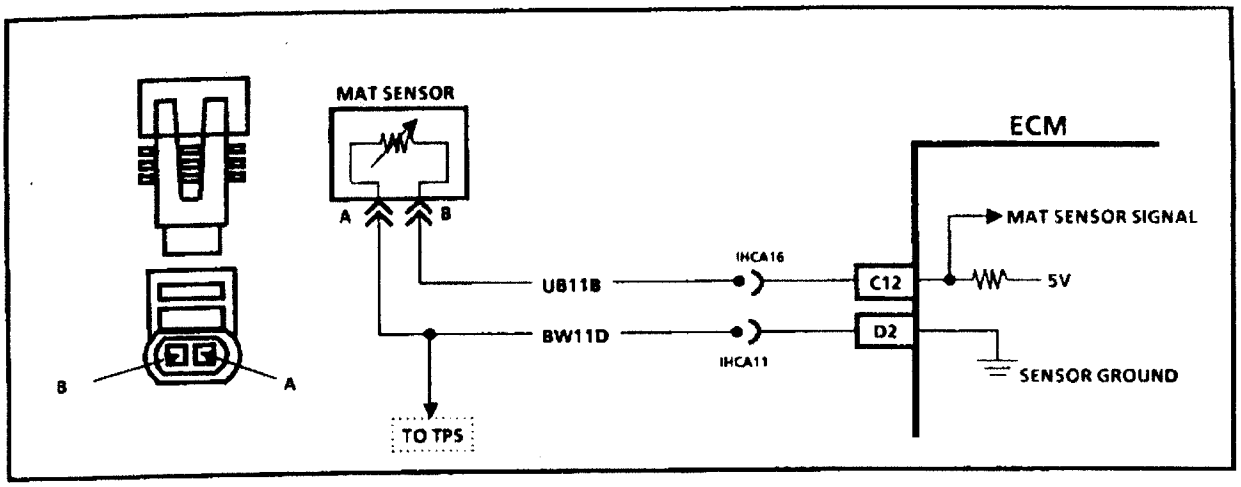

CODE 25

MANIFOLD AIR TEMPERATURE (MAT) SENSOR CIRCUIT
(HIGH TEMPERATURE INDICATED)
1.6L TURBO LOTUS ELAN

Circuit Description:

The Manifold Air Temperature Sensor uses a thermistor to control the signal voltage to the ECM. The ECM applies a voltage of approx. 5 volts on CKT UB11B to the sensor. When manifold air is cold, the sensor (thermistor) resistance is high, therefore, the ECM will see a high signal voltage. As the air warms, the sensor resistance becomes less and the voltage drops.

Test Description:

Numbers below refer to circled numbers on the diagnostic chart.

1. This check determines if the Code 25 is the result of a hard failure or an intermittent condition.
   A Code 25 will set if:
   - Engine has been running for 2 minutes.
   - A MAT temperature greater than 145°C is detected.

Diagnostic Aids:

If the engine has been allowed to cool to an ambient temperature (overnight), coolant and MAT temperatures may be checked with a Tech 1 and should read close to each other.

The "Temperature To Resistance Value" scale at the right may be used to test the MAT sensor at various temperature levels to evaluate the possibility of a "slewed" (mis-scaled) sensor. A "slewed" sensor could result in poor driveability complaints.

If Code 25 is intermittent:

- Check (wiggle) ECM pins C12 and D2 sensor wires and connector while watching "MASS AIR TEMP" on Tech 1 display. Temperature should be stable.
- Clear Code and conduct test drive with Tech 1 in "Snapshot" mode. In case of a drastic change of MAT reading trigger manually by pressing Tech 1 "ENTER" key.
- Refer to "Intermittents" in Section EMK.6.

CODE 25

MANIFOLD AIR TEMPERATURE (MAT) SENSOR CIRCUIT
(HIGH TEMPERATURE INDICATED)
1.6L TURBO LOTUS ELAN

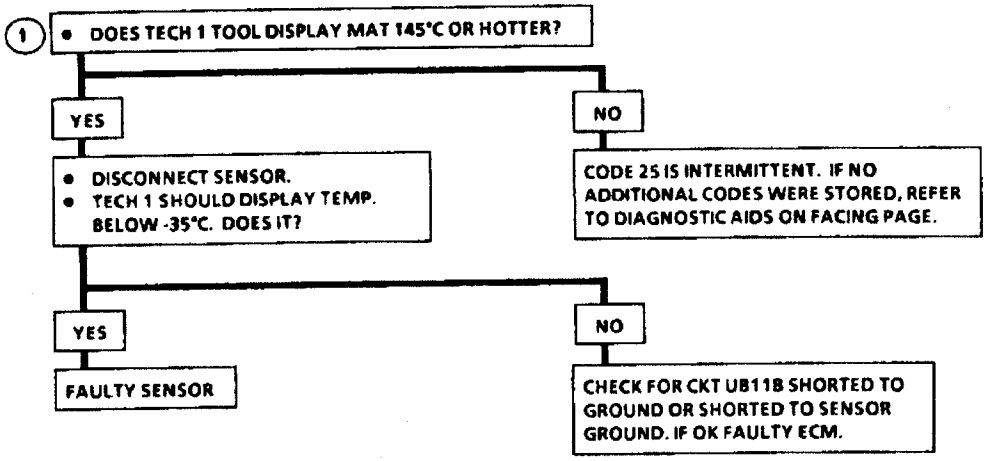

DIAGNOSTIC AID

MAT SENSOR		
TEMPERATURE TO RESISTANCE VALUES (APPROXIMATE)		
°F	°C	OHMS
210	100	185
160	70	450
100	38	1,800
70	20	3,400
40	4	7,500
20	-7	13,500
0	-18	25,000
-40	-40	100,700

CLEAR CODES AND CONFIRM NO "CHECK ENGINE" LIGHT.

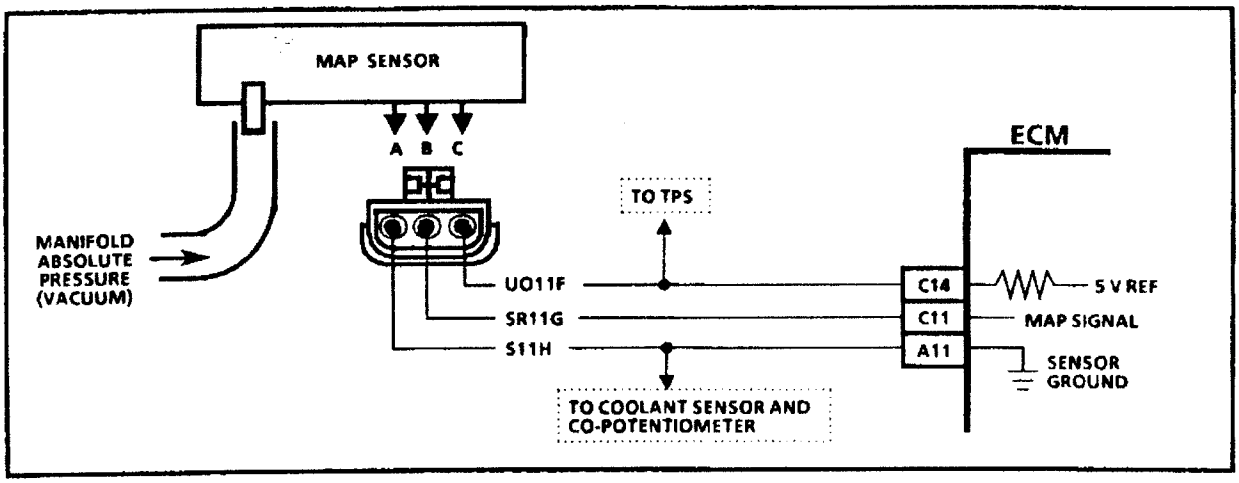

CODE 31/33

MANIFOLD ABSOLUTE PRESSURE (MAP) SENSOR CIRCUIT
(SIGNAL VOLTAGE HIGH - LOW VACUUM)
1.6L TURBO LOTUS ELAN

Circuit Description:

The Manifold Absolute Pressure (MAP) Sensor responds to changes in manifold pressure (vacuum). The ECM receives this information as a signal voltage that will vary from about 0.6 to 1.0 volts, at closed throttle idle, to 4 - 4.5 volts at wide open throttle and full boost.

If the MAP sensor fails, the ECM will substitute a fixed MAP value and use the Throttle Position Sensor (TPS) to control fuel delivery.

Test Description:

Numbers below refer to circled numbers on the diagnostic chart.

1. This step will determine if Code 33 is the result of a hard failure or an intermittent condition.
   A Code 33 will set if:
   - MAP signal indicates greater than 90kPa (over 2.1V) with A/C "OFF".
   - TPS less than 1.0%.
   - These conditions are present for a time longer than 0.2 seconds.
2. This step simulates conditions for a Code 34. If the ECM recognizes the change, the ECM, and CKT's UO11F and SR11G, are OK. If CKT S11H is open, there may also be a Code 15 stored.

Diagnostic Aids:

With the ignition "ON" and the engine stopped, the manifold pressure is equal to atmospheric pressure and the signal voltage will be high. This information is used by the ECM as an indication of vehicle altitude and is referred to as BARO. Comparison of this BARO reading with a known good vehicle with the same sensor is a good way to check accuracy of a "suspect" sensor. Readings should be the same ± .4 volt.

An intermittent open in CKT S11H can cause a Code 33.

- Check (wiggle) ECM connector pin S11H, wiring and sensor connector while watching "MAP" on Tech1 display, engine idling. Voltage should not increase above 2.5 volts.
- Clear Code and conduct test drive with Tech 1 in "Snapshot" mode. Set trigger on Code 33.
- Refer to "Intermittents" in Section EMK.6.

CODE 31/33

MANIFOLD ABSOLUTE PRESSURE (MAP) SENSOR CIRCUIT
(SIGNAL VOLTAGE HIGH - LOW VACUUM)
1.6L TURBO LOTUS ELAN

1. • CHECK FOR OTHER PROBLEMS WHICH COULD CAUSE A ROUGH IDLE BEFORE USING THIS CHART. SEE SYMPTOMS IN SECTION EMK.6.
   • ENGINE IDLING.
   DOES TECH 1 DISPLAY A MAP OF 2.1 VOLTS OR OVER?

   YES →

   NO → CODE 33 IS INTERMITTENT. IF NO ADDITIONAL CODES WERE STORED, REFER TO DIAGNOSTIC AIDS ON FACING PAGE.

2. • IGNITION "OFF".
   • DISCONNECT MAP SENSOR ELECTRICAL CONNECTOR.
   • IGNITION "ON".
   • TECH 1 SHOULD READ A VOLTAGE OF LESS THAN 1 VOLT.
   DOES IT?

   YES →

   NO → CHECK FOR CKT SR11G SHORTED TO VOLTAGE OR SHORTED TO CKT UO11F. IF OK FAULTY ECM.

• PROBE CKT S11H WITH A TEST LIGHT TO 12 VOLTS.
• TEST LIGHT SHOULD LIGHT.
DOES IT?

YES → PLUGGED OR LEAKING SENSOR VACUUM HOSE OR FAULTY MAP SENSOR.

NO → CHECK FOR OPEN CKT S11H. IF OK, FAULTY ECM.

CLEAR CODES AND CONFIRM NO "CHECK ENGINE" LIGHT.

CODE 31/33

MANIFOLD ABSOLUTE PRESSURE (MAP) SENSOR CIRCUIT
(SIGNAL VOLTAGE HIGH - LOW VACUUM)
1.6L TURBO LOTUS ELAN

1. • CHECK FOR OTHER PROBLEMS WHICH COULD CAUSE A ROUGH IDLE BEFORE USING THIS CHART. SEE SYMPTOMS IN SECTION EMK.6.
   • ENGINE IDLING.
   DOES TECH 1 DISPLAY A MAP OF 2.1 VOLTS OR OVER?

   - NO → CODE 33 IS INTERMITTENT. IF NO ADDITIONAL CODES WERE STORED, REFER TO DIAGNOSTIC AIDS ON FACING PAGE.
   - YES ↓

2. • IGNITION "OFF".
   • DISCONNECT MAP SENSOR ELECTRICAL CONNECTOR.
   • IGNITION "ON".
   • TECH 1 SHOULD READ A VOLTAGE OF LESS THAN 1 VOLT.
   DOES IT?

   - NO → CHECK FOR CKT SR11G SHORTED TO VOLTAGE OR SHORTED TO CKT UO11F. IF OK FAULTY ECM.
   - YES ↓

• PROBE CKT S11H WITH A TEST LIGHT TO 12 VOLTS.
• TEST LIGHT SHOULD LIGHT.
DOES IT?

- NO → CHECK FOR OPEN CKT S11H. IF OK, FAULTY ECM.
- YES → PLUGGED OR LEAKING SENSOR VACUUM HOSE OR FAULTY MAP SENSOR.

CLEAR CODES AND CONFIRM NO "CHECK ENGINE" LIGHT.

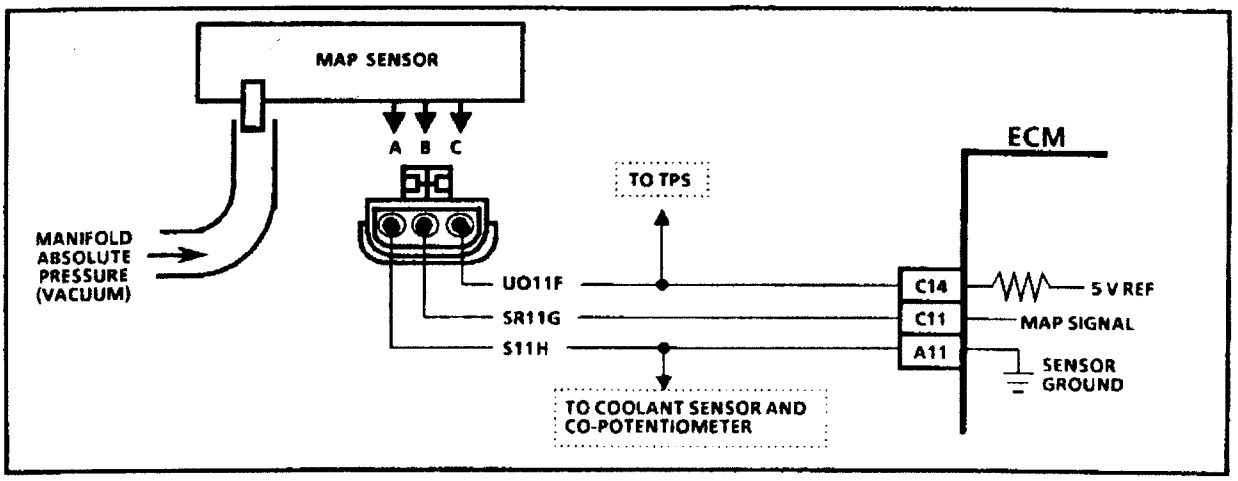

CODE 34

MANIFOLD ABSOLUTE PRESSURE (MAP) SENSOR CIRCUIT
(SIGNAL VOLTAGE LOW - HIGH VACUUM)
1.6L TURBO LOTUS ELAN

Circuit Description:

The Manifold Absolute Pressure (MAP) Sensor responds to changes in manifold pressure (vacuum). The ECM receives this information as a signal voltage that will vary from about 0.6 to 1.0 volts at closed throttle idle, to 4 - 4.5 volts at wide open throttle and full boost.

If the MAP sensor fails, the ECM will substitute a fixed MAP value and use the Throttle Position Sensor (TPS) to control fuel delivery.

Test Description:

Numbers below refer to circled numbers on the diagnostic chart.

1. This step determines if Code 34 is the result of a hard failure or an intermittent condition.
   A Code 34 will set when:
   - MAP reading is less than 14 kPa.
   - Engine rpm is less than 1200 rpm.

   OR
   - MAP reading is less than 14 kPa.
   - Engine rpm is greater than 1200 rpm.
   - TPS is less than 3.5%.
2. Jumpering harness terminals "B" to "C", 5 volt to signal, will determine if the sensor is at fault, or if there is a problem with the ECM or wiring.
3. The Tech 1 tool does not display 12 volts. The important thing is that the ECM recognizes the voltage as more than 4 volts, indicating that the ECM and CKT SR11G are OK.
4. Disconnect TPS in order to check for internally shorted sensor.

Diagnostic Aids:

With the ignition "ON" and the engine stopped, the manifold pressure is equal to atmospheric pressure and the signal voltage will be high. This information is used by the ECM as an indication of vehicle altitude and is referred to as BARO. Comparison of this BARO reading with a known good vehicle with the same sensor is a good way to check accuracy of a "suspect" sensor. Readings should be the same ± .4 volt.

If Code 34 is intermittent:

- Check (wiggle) pins C11 and C14, sensor wiring and connector while watching "MAP" on Tech1 display. Voltage should not drop.
- Clear Code and conduct test drive with Tech 1 in "Snapshot" mode. Set trigger on Code 34.
- Refer to "Intermittents" in Section EMK.6.

CODE 34

MANIFOLD ABSOLUTE PRESSURE (MAP) SENSOR CIRCUIT
(SIGNAL VOLTAGE LOW - HIGH VACUUM)
1.6L TURBO LOTUS ELAN

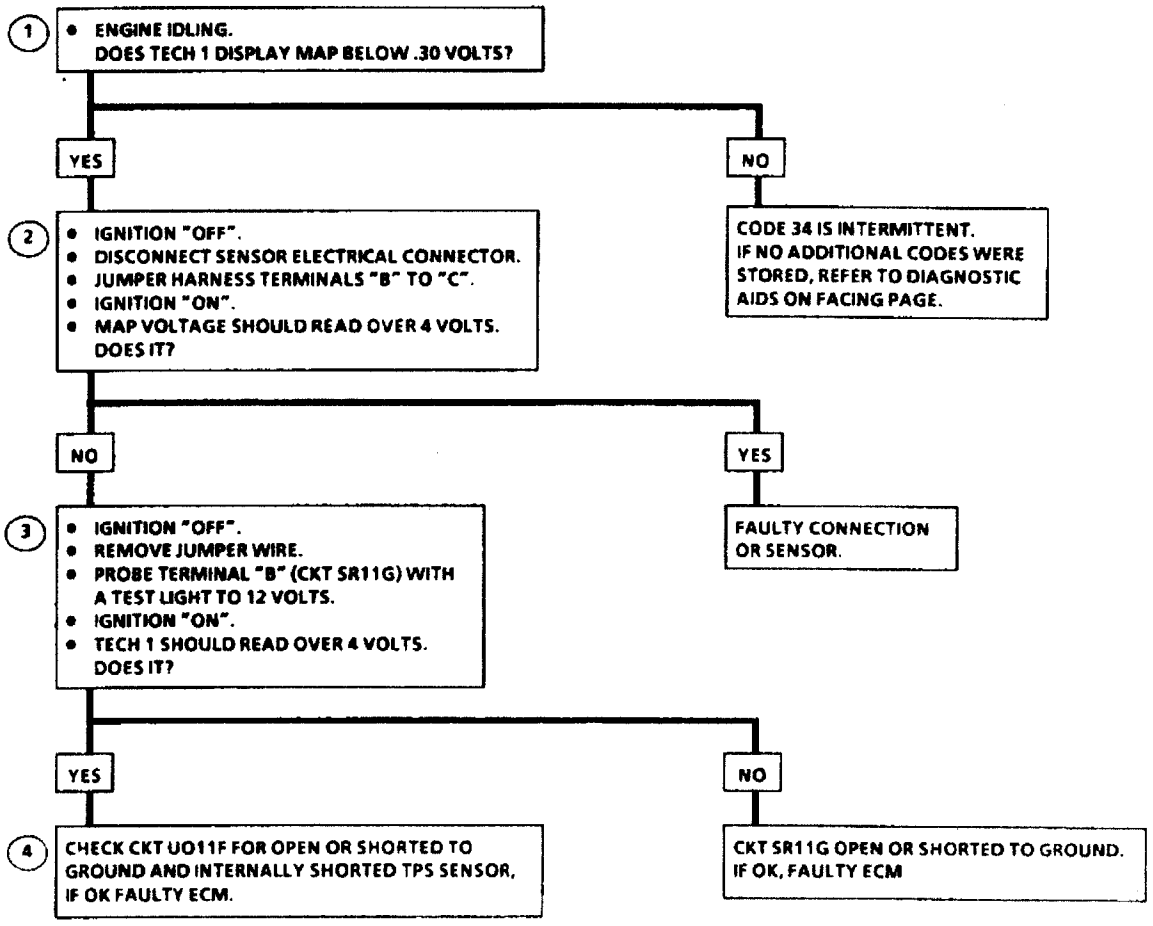

CLEAR CODES AND CONFIRM NO "CHECK ENGINE" LIGHT.

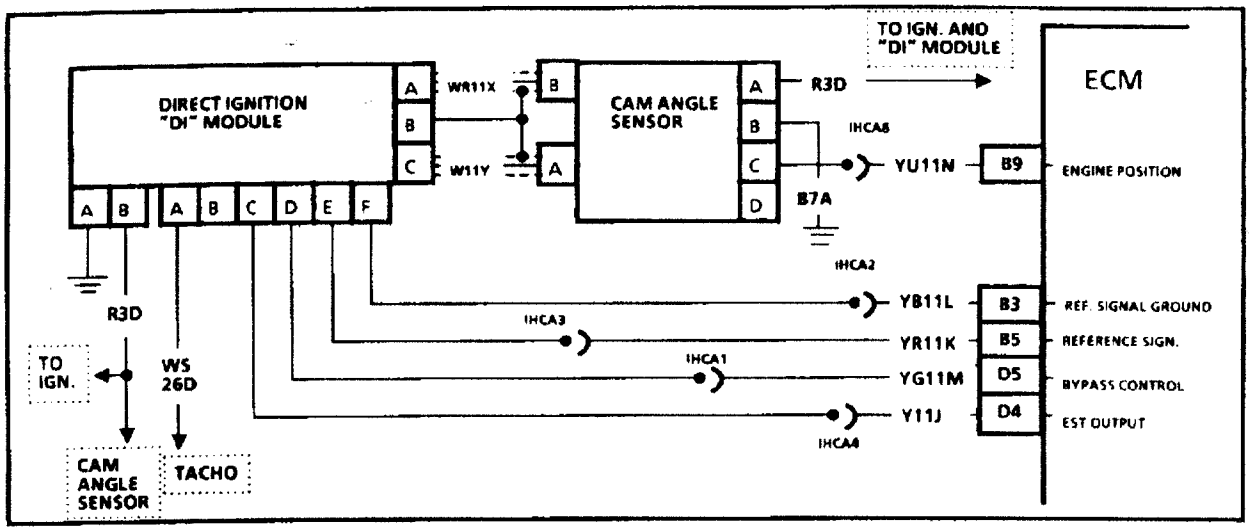

CODE 41

ENGINE SPEED SIGNAL MISSING
1.6L TURBO LOTUS ELAN

Circuit Description:

The engine speed signal is a 0 to 5 volts digital input to the ECM which occurs at a frequency of once per camshaft revolution. It is generated by the cam angle sensor located at the end of the camshaft. The signal is used by the ECM to set the alternating firing of the injectors.

Code 41 will set under the following conditions: The ECM does not receive signal pulses for more than 20 engine revolutions , or it does not receive signal pulses for more than 5 seconds.

Test Description:

Numbers below refer to circled numbers on the diagnostic chart.

1. Whenever the "reference pulses" are missing the ECM should count "sync pulses" and display them on Tech 1 during crank.
2. The ECM supplies 5 volts on CKT YU11N. Whenever the circuit is grounded by means of the test light there should be another "count" on Tech 1 display.

Diagnostic Aids:

An intermittent may be caused by a poor connection, rubbed through wire insulation, or a wire broken inside the insulation.

- Clear code and check (wiggle) pin B9 at ECM, wiring and distributor (engine position sensor) connector in order to see if code resets..
- Conduct a test drive with TECH 1 in "Snapshot" mode. Set trigger on Code 41.

CODE 41

ENGINE SPEED SIGNAL MISSING
1.6L TURBO LOTUS ELAN

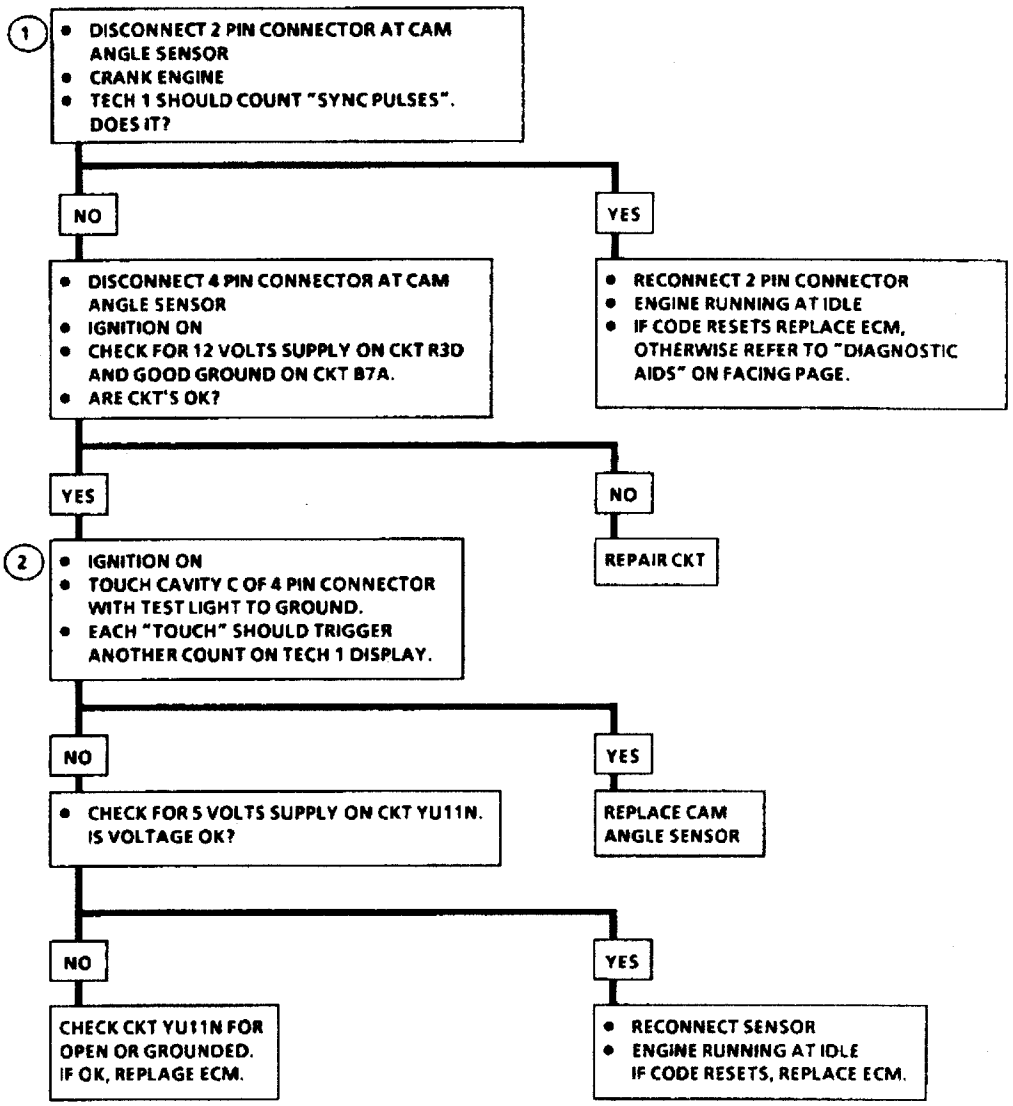

CLEAR CODES AND CONFIRM NO "CHECK ENGINE LIGHT".

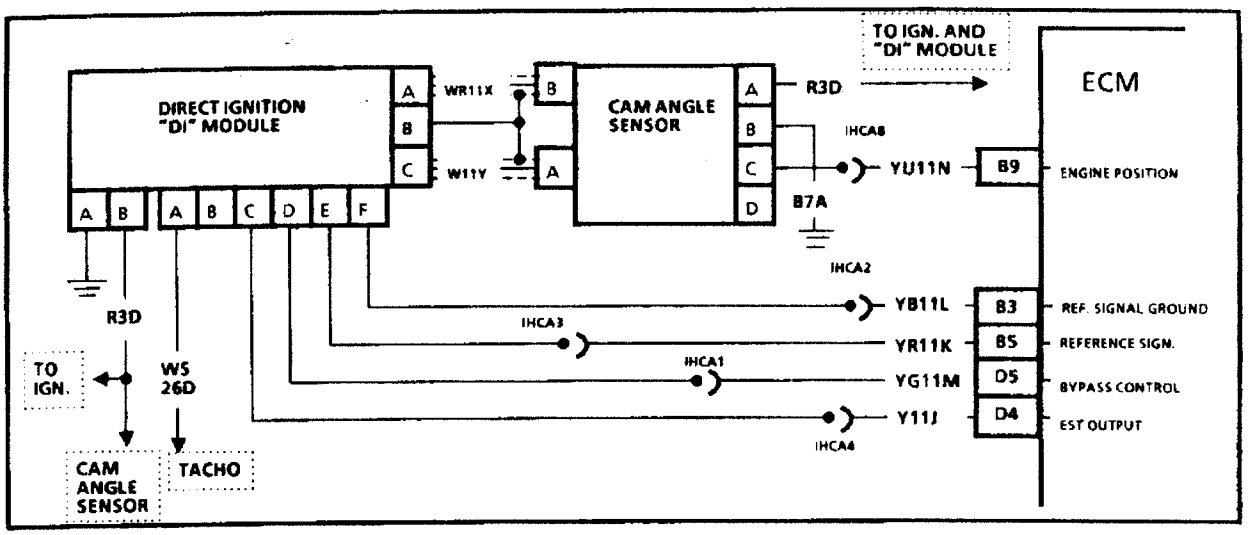

CODE 42

ELECTRONIC SPARK TIMING (EST) CIRCUIT 1.6L TURBO LOTUS ELAN

Circuit Description:

The ignition module sends a reference signal on CKT YR11K to the ECM, when the engine is cranking. While the engine speed is under 800 rpm, the ignition module will control ignition timing. When the engine speed exceeds 800 rpm, the ECM applies 5 volts to the "bypass" line CKT YG11M to switch the timing to ECM control on EST CKT Y11J.

When the system is running on the ignition module, that is, no voltage on the bypass line, the ignition module grounds the EST signal. The ECM expects to see no voltage on the EST line during this condition,. If it sees a voltage, is sets Code 42 and will not go into the EST mode.

When the rpm for EST is reached (about 800 rpm), voltage will be applied to be bypass line, the EST should no longer be grounded in the ignition module, so the EST voltage should be varying.

If the bypass line is open or grounded, the ignition module will not switch to EST mode, so, the EST voltage will be low and Code 42 will be set.

If the EST line is grounded, the ignition module will switch to EST but, because the line is grounded, there will be no EST signal. A Code 42 will be set.

Test Description:

Numbers below refer to circled numbers on the diagnostic chart.

1. Code 42 means the ECM has seen an open or short to ground in the EST or bypass circuits. This test confirms Code 42 and that the fault causing the code is present.
2. Checks for a normal EST ground path through the ignition module. An EST CKT Y11J, shorted to ground, will also read less than 500 ohms, however, this will be checked later.
3. As the test light voltage touches CKT YG 11M, the module should switch, causing the ohmmeter to "overrange", if the meter is in the 1000-2000 ohms position. Selecting the 10 - 20,000 ohms position will indicate above 5000 ohms. The important thing is that the module "switched".
4. The module did not switch and this step checks for:
   - EST CKT Y11J shorted to ground.
   - Bypass CKT YG11M open.
   - Faulty ignition module connection or module.
5. Confirms that Code 42 is a faulty ECM and not an intermittent in CKT's.

Diagnostic Aids:

An intermittent may be caused by a poor connection, rubbed through wire insulation, or a wire broken inside the insulation.

- Inspect harness connectors for backed out terminals, improper mating, broken locks, improperly formed or damaged terminals, poor terminal to wire connection, and damaged harness.
- Run engine while checking (wiggling) EST and bypass pins at relevant connectors and wiring with TECH 1 in "Snapshot" mode. Set trigger on Code 42.

CODE 42

ELECTRONIC SPARK TIMING (EST) CIRCUIT 1.6L TURBO LOTUS ELAN

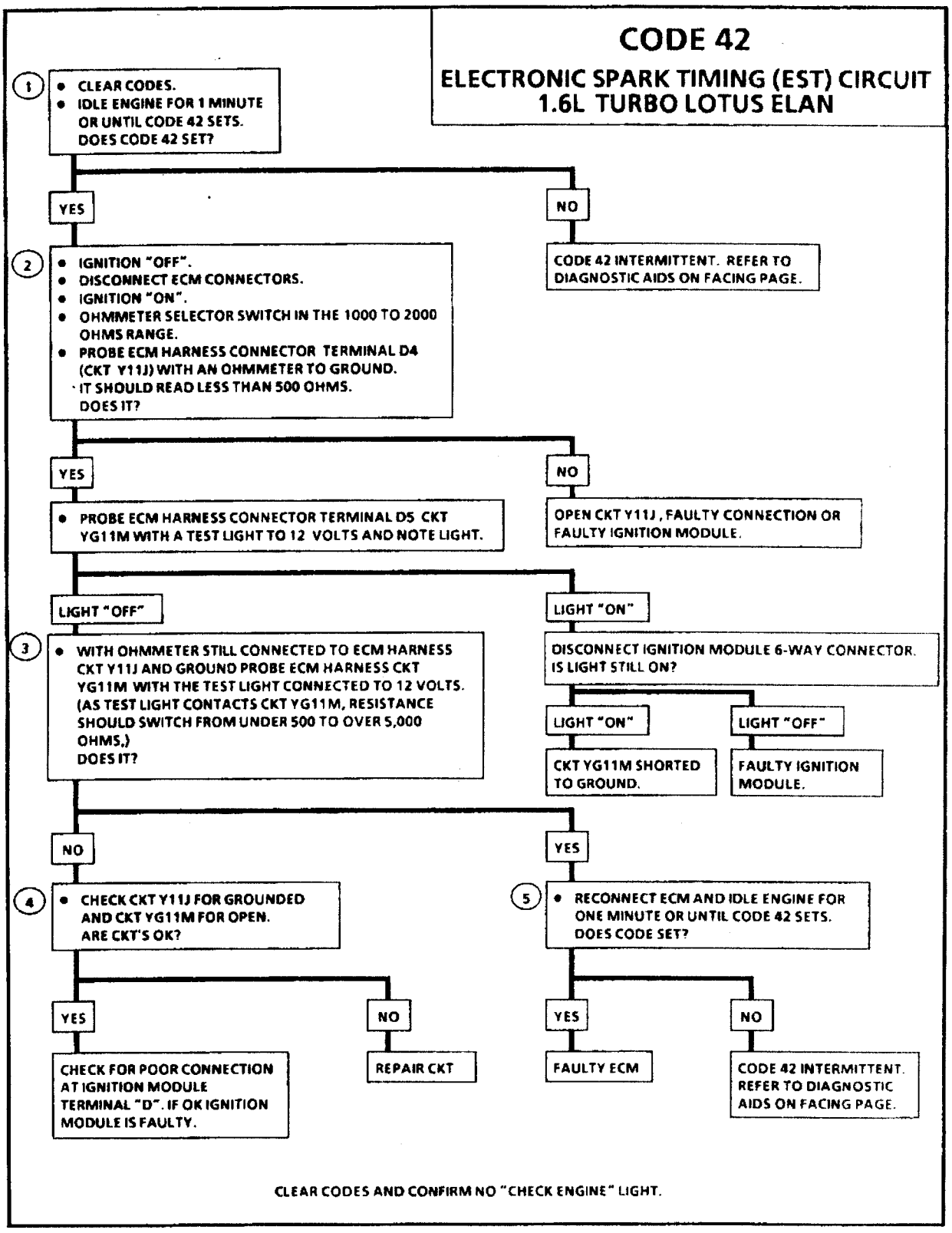

CLEAR CODES AND CONFIRM NO "CHECK ENGINE" LIGHT.

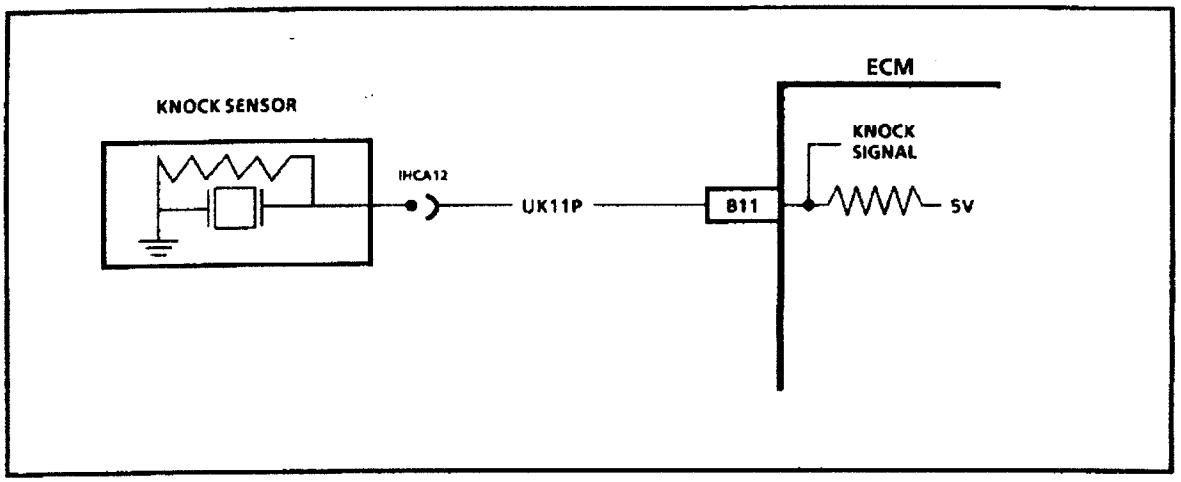

CODE 43

ELECTRONIC SPARK CONTROL (ESC) CIRCUIT 1.6L TURBO LOTUS ELAN

Circuit Description:

The knock sensor detects engine detonation and the ECM retards the electronic spark timing based on the signal being received. The circuitry within the knock sensor causes the ECM 5 volts to be pulled down so that, under a no knock condition, CKT UK11P would measure about 2.5 volts. The knock sensor produces an AC signal which rides on the 2.5 volts DC voltage. The amplitude and signal frequency are dependent upon the knock level.

Code 43 will be set.

- If there is an indication of knock for 3.67 seconds over a 3.9 second interval with the engine running.

Test Description:

Numbers below refer to circled numbers on the diagnostic chart.

1. If the conditions for the test, as described above, are being met, the the check engine light will be turned "ON" again and Code 43 stored. The Tech 1 could indicate "YES" when the knock signal position is selected as well. If an audible knock is heard from the engine, repair the internal engine problem, because normally, no knock should be detected at idle.
2. Tapping the oil filter base casting should produce a knock signal.
3. The ECM has a 5 volts signal through a pull-up resistor which should be present at the injector harness terminal.
4. This test determines if the knock sensor is faulty or if the ECM is faulty.

Diagnostic Aids:

If Code 43 is intermittent:

- Check (wiggle) CKT UK11P at ECM connector and sensor with TECH 1 in "Snapshot" mode and "KNOCK SIGNAL" on display. There should be no Code set and no knock signal indicated.
- Refer to "Intermittents" in Section EMK. 6.
- Mechanical engine knock can cause a knock sensor signal. Abnormal engine noise must be corrected before using this chart.

CODE 43

ELECTRONIC SPARK CONTROL (ESC) CIRCUIT 1.6L TURBO LOTUS ELAN

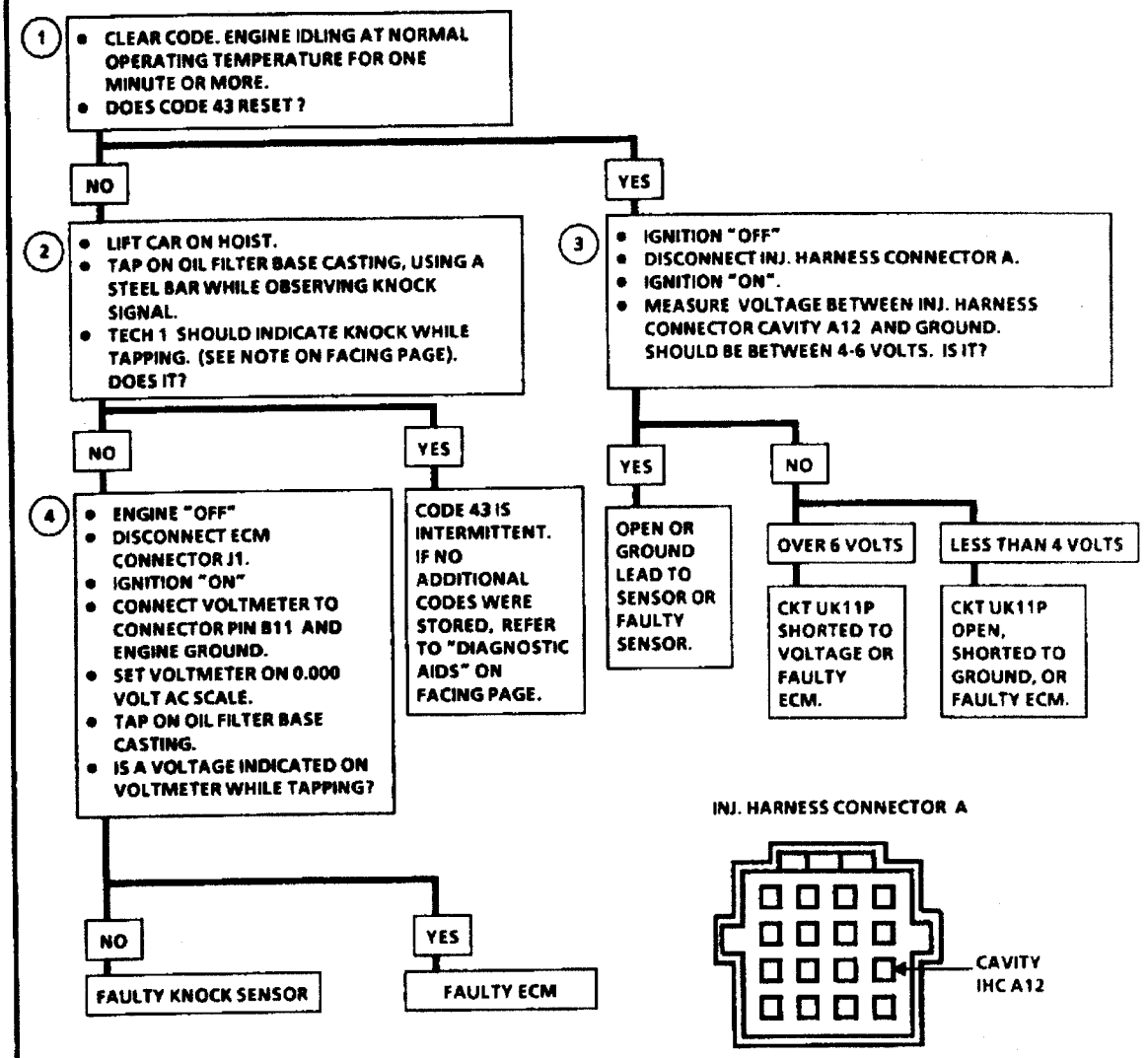

CLEAR CODES AND CONFIRM NO "CHECK ENGINE LIGHT".

CODE 51

PROM ERROR
(FAULTY ECM)
1.6L TURBO LOTUS ELAN

THE ECM OF THE 1.6L TURBO LOTUS ELAN IS A SEALED UNIT, AND NO ACCESS TO THE MEM-CAL IS POSSIBLE. IF CODE 51 IS DISPLAYED, THE COMPLETE ECM MUST BE REPLACED.

CLEAR CODES AND CONFIRM NO "CHECK ENGINE" LIGHT.

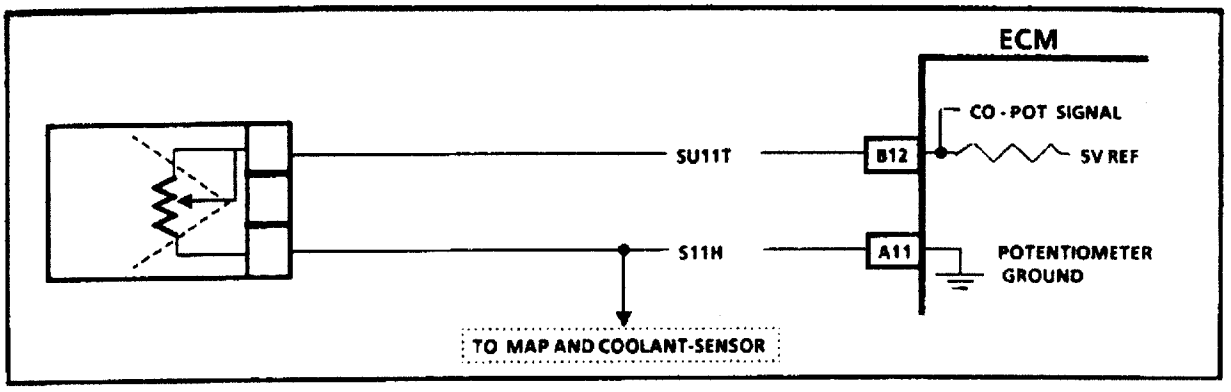

CODE 54

CO - POTENTIOMETER CIRCUIT
(SIGNAL VOLTAGE HIGH OR LOW)
1.6L TURBO LOTUS ELAN

Circuit Description:

The CO - Potentiometer provides a constant voltage signal from 0.6 volts to about 4.2 volts. Depending on the signal voltage the ECM will decrease or increase injection pulse width in order to obtain the CO emission percentage required. See EMK.3-E for CO- emission check and reset.

Test Description:

Numbers below refer to circled numbers on the diagnostic chart.

1. This step checks to see if Code 54 is the result of a hard failure or an intermittent condition.
   A Code 54 will set if:
   - CO - Potentiometer output voltage is lower than
     0.3 volt or above 4.7 volts
2. This test determines if the potentiometer is faulty or other CKT components.

Diagnostic Aids:

The TECH 1 displays CO - Potentiometer volts.

A Code 54 will result if CKT SU11T or S11H are open or SU11T is shorted to ground.

If Code 54 is intermittent:

- Check (wiggle) ECM connector pins B12 and A11, while watching "CO ADJ. VOLTS" on Tech 1 display. Voltage should be constant.
- Reset CO-emission (see EMK. 3-E).
- Check for injector leaking and incorrect fuel pressure.

NOTE: IF CODE 54 IS SET TOGETHER WITH 41 AND/OR 42, THE SETTING OF CODE 54 IS LIKELY TO BE FALSE. DO NOT CHANGE CO POTENTIOMETER BEFORE INVESTIGATING CODES 41 AND/OR 42.

CODE 54

CO - POTENTIOMETER CIRCUIT (SIGNAL VOLTAGE HIGH OR LOW) 1.6L TURBO LOTUS ELAN

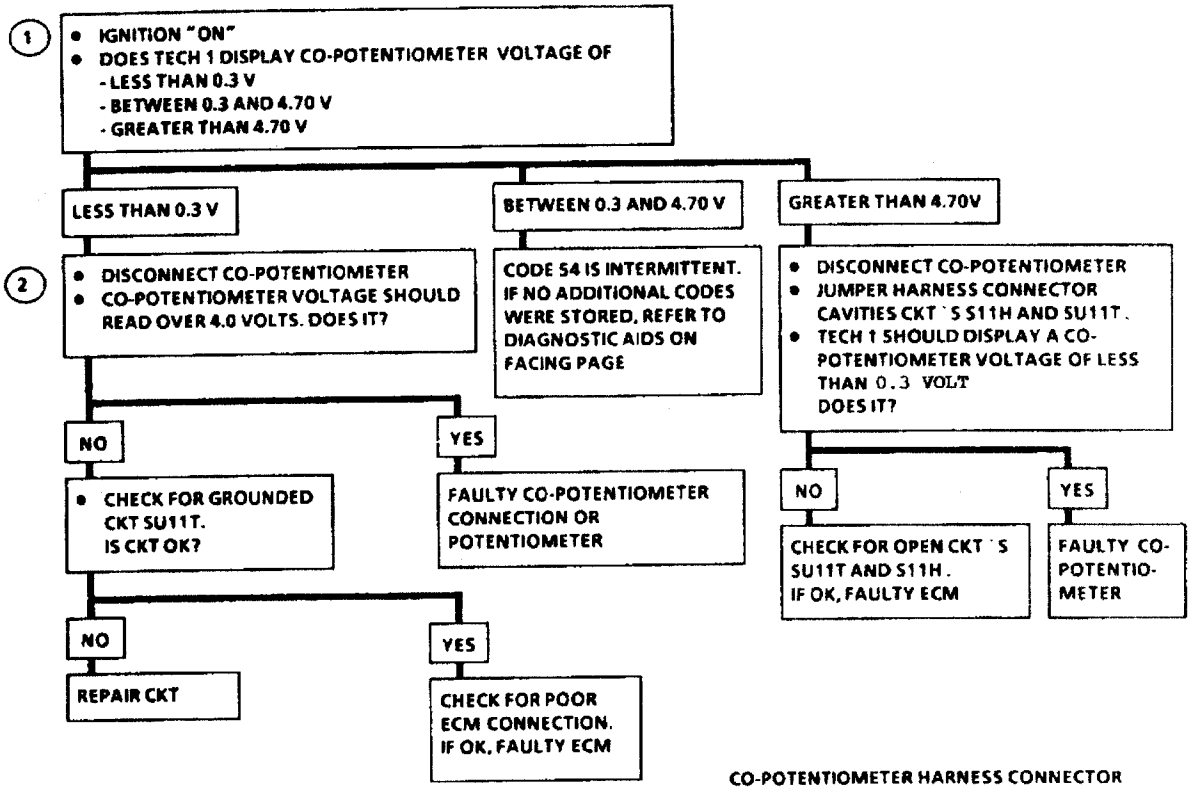

CO-POTENTIOMETER HARNESS CONNECTOR

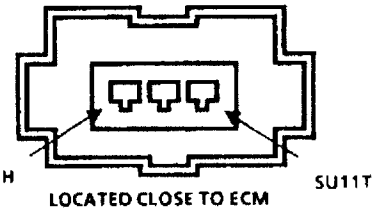

CLEAR CODES AND CONFIRM NO "CHECK ENGINE" LIGHT.

CODE 54

CO - POTENTIOMETER CIRCUIT (SIGNAL VOLTAGE HIGH OR LOW) 1.6L TURBO LOTUS ELAN

(1)
- IGNITION "ON"
- DOES TECH 1 DISPLAY CO-POTENTIOMETER VOLTAGE OF
  - LESS THAN 0.3 V
  - BETWEEN 0.3 AND 4.70 V
  - GREATER THAN 4.70 V

LESS THAN 0.3 V

(2)
- DISCONNECT CO-POTENTIOMETER
- CO-POTENTIOMETER VOLTAGE SHOULD READ OVER 4.0 VOLTS. DOES IT?

NO

- CHECK FOR GROUNDED CKT SU11T. IS CKT OK?

NO

REPAIR CKT

YES

CHECK FOR POOR ECM CONNECTION. IF OK, FAULTY ECM

YES

FAULTY CO-POTENTIOMETER CONNECTION OR POTENTIOMETER

BETWEEN 0.3 AND 4.70 V

CODE 54 IS INTERMITTENT. IF NO ADDITIONAL CODES WERE STORED, REFER TO DIAGNOSTIC AIDS ON FACING PAGE

GREATER THAN 4.70V

- DISCONNECT CO-POTENTIOMETER
- JUMPER HARNESS CONNECTOR CAVITIES CKT 'S S11H AND SU11T.
- TECH 1 SHOULD DISPLAY A CO-POTENTIOMETER VOLTAGE OF LESS THAN 0.3 VOLT DOES IT?

NO

CHECK FOR OPEN CKT 'S SU11T AND S11H. IF OK, FAULTY ECM

YES

FAULTY CO-POTENTIO-METER

CO-POTENTIOMETER HARNESS CONNECTOR

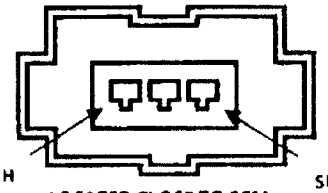

LOCATED CLOSE TO ECM

CLEAR CODES AND CONFIRM NO "CHECK ENGINE" LIGHT.

SECTION EMK.5

1.6L TURBO LOTUS ELAN

DIAGNOSTIC CHARTS

"Non-Scan"	Diagnostic Circuit Check	Page EMK. 5 - 2
Code 14 -	Coolant Temperature Sensor Circuit (Signal Voltage Low - High Temperature Indicated)	Page EMK. 5 - 4
Code 15 -	Coolant Temperature Sensor Circuit (Signal Voltage High - Low Temperature Indicated)	Page EMK. 5 - 6
Code 21 -	Throttle Position Sensor (TPS) Circuit (Signal Voltage High)	Page EMK. 5 - 8
Code 22 -	Throttle Position Sensor (TPS) Circuit (Signal Voltage Low)	Page EMK. 5 -10
Code 23 -	Manifold Air Temperature (MAT) Sensor Circuit (Signal Voltage High)	Page EMK. 5 -12
Code 24 -	Vehicle Speed Sensor (VSS) Circuit	Page EMK. 5 -14
Code 25 -	Manifold Air Temperature (MAT) Sensor Circuit (Signal Voltage Low)	Page EMK. 5 -16
Code 31/33 -	MAP Sensor Circuit (Signal Voltage High - Low Vacuum)	Page EMK. 5 -18
Code 34 -	MAP Sensor Circuit (Signal Voltage Low - High Vacuum)	Page EMK. 5 -20
Code 41 -	Engine Speed Signal Missing	Page EMK. 5 -22
Code 42 -	Electronic Spark Timing (EST) Circuit	Page EMK. 5 -24
Code 43 -	Electronic Spark Control (EST) Circuit	Page EMK. 5 -26
Code 51 -	PROM Error (Faulty ECM)	Page EMK. 5 -28
Code 54 -	CO-Potentiometer Circuit (Signal Voltage High or Low)	Page EMK. 5 -28

DIAGNOSTIC CIRCUIT CHECK

The "Diagnostic Circuit Check" verifies the system is functioning correctly. Some special considerations to keep in mind while making the "Diagnostic Circuit Check" are:

Blocking Drive Wheels

The vehicle drive wheels should always be blocked while checking the system.

"NON-SCAN" DIAGNOSTIC CIRCUIT CHECK

1.6L TURBO LOTUS ELAN

Circuit Description:

The Diagnostic Circuit Check is an organized approach for identifying a problem caused by the Fuel Injection System.

Driver comments normally fall into one of the following areas:

- Steady "Check Engine" light
- Driveability Problem
- Engine "Cranks But Will Not Run"

Understanding the chart and using it correctly will reduce diagnosis time and prevent the unnecessary replacement of parts.

Test Description:

Numbers below refer to circled numbers on the diagnostic chart.

1. A steady "Check Engine" light with the ignition "ON" and engine stopped confirms battery and ignition voltage to the Electronic Control Module (ECM).

2. Ground diagnosis terminal by jumpering terminal "A" to "B" in the ALDL connector located close to the ECM in the passenger leg room area.
   The ECM will cause the "Check Engine" light to flash Code 12, indicating that the ECM diagnostics are working. Code 12 will flash three (3) times, followed by any other trouble codes stored in the memory. Each additional code will flash three (3) times, starting with the lowest code,and then start over again with Code 12. If there are no other codes, Code 12 will flash until the diagnostic "test" terminal jumper is disconnected or the engine is started.

3. Record all stored codes except for Code 12. If the problem is "Engine Cranks But Will Not Run", go to chart EMK. 4-3. If the customer complaint is "Idle Speed too High or Low", refer to chart EMK. 4-9.

4. If no additional codes were recorded, see Section EMK.6 for driveability symptoms and recommended service procedures.

5. Clearing codes. Ignition "OFF". Disconnect battery for ten seconds.

"NON-SCAN" DIAGNOSTIC CIRCUIT CHECK

1.6L TURBO LOTUS ELAN

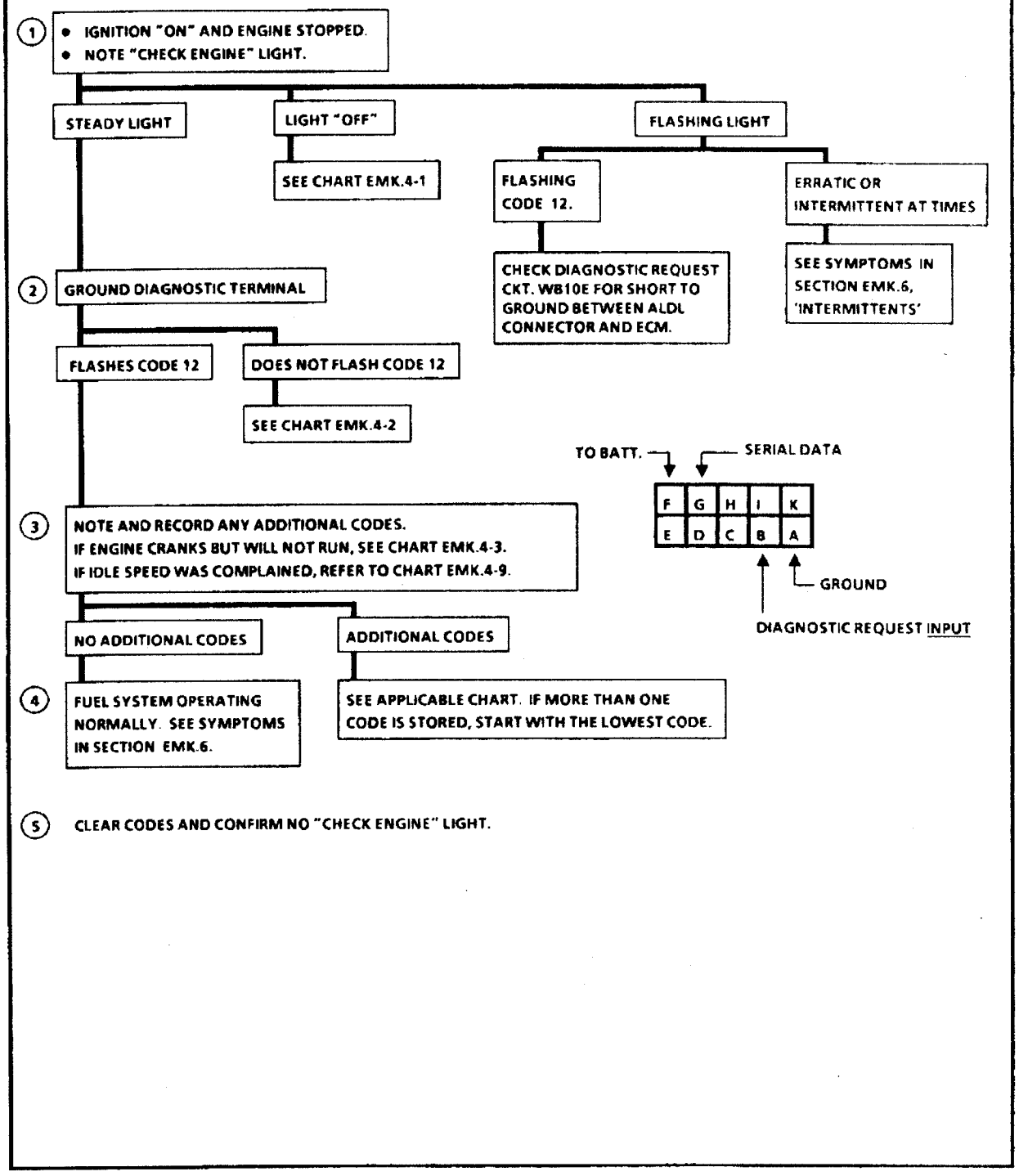

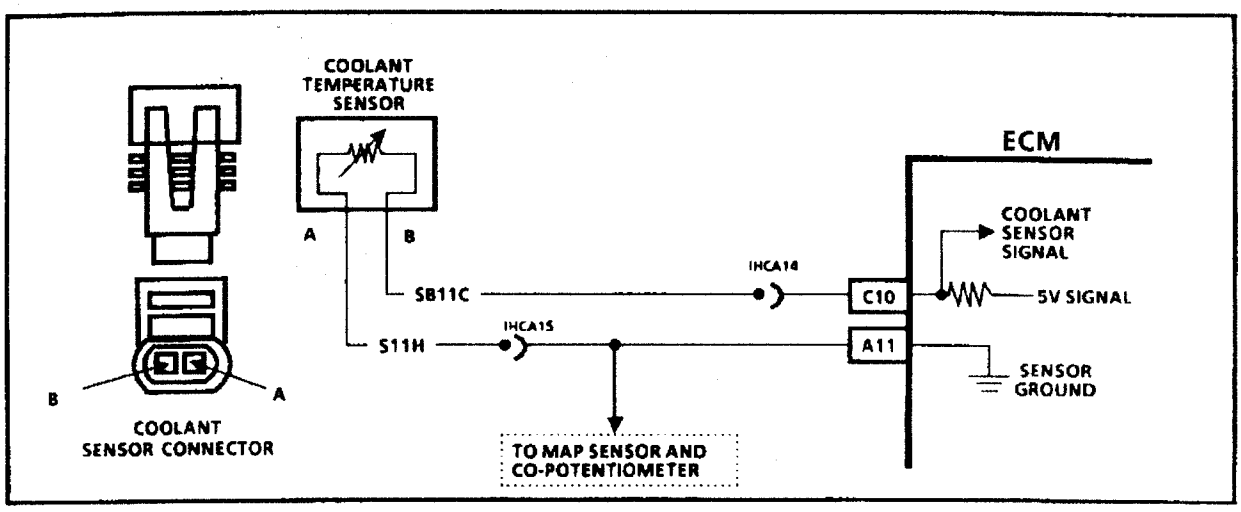

CODE 14

COOLANT TEMPERATURE SENSOR CIRCUIT
(SIGNAL VOLTAGE LOW - HIGH TEMPERATURE INDICATED)
1.6L TURBO LOTUS ELAN

Circuit Description:

The Coolant Temperature Sensor uses a thermistor to control the signal voltage at the ECM. The ECM applies a voltage on CKT SB11C to the sensor. When the engine is cold, the sensor (thermistor) resistance is high, therefore, the ECM will see high signal voltage.

As the engine warms, the sensor resistance becomes less, and the voltage drops. At normal engine operating temperature, the voltage will measure about 1.0 to 2.4 volts at the ECM terminal "C10".

Coolant temperature is one of the inputs used to control:

- Fuel delivery
- Engine Spark Timing (EST)
- Idle (IAC)
- Exhaust Gas Recirculation
- Secondary Throttles
- Boost Control
- Air Conditioning

Test Description:

Numbers below refer to circled numbers on the diagnostic chart.

1. Checks to see if code was set as result of hard failure or intermittent condition.
   Code 14 will set if:
   - Engine has been running for 2 minutes.
   - Signal Voltage indicates a coolant temperature above 145°C (275°F).
2. This test simulates conditions for a Code 15. If the ECM recognizes the open circuit (high voltage), and displays a low temperature, the ECM and wiring are OK.

Diagnostic Aids:

A code 14 will result if CKT SB11C is shorted to ground.

If Code 14 is intermittent, refer to Section ÉMK. 6.

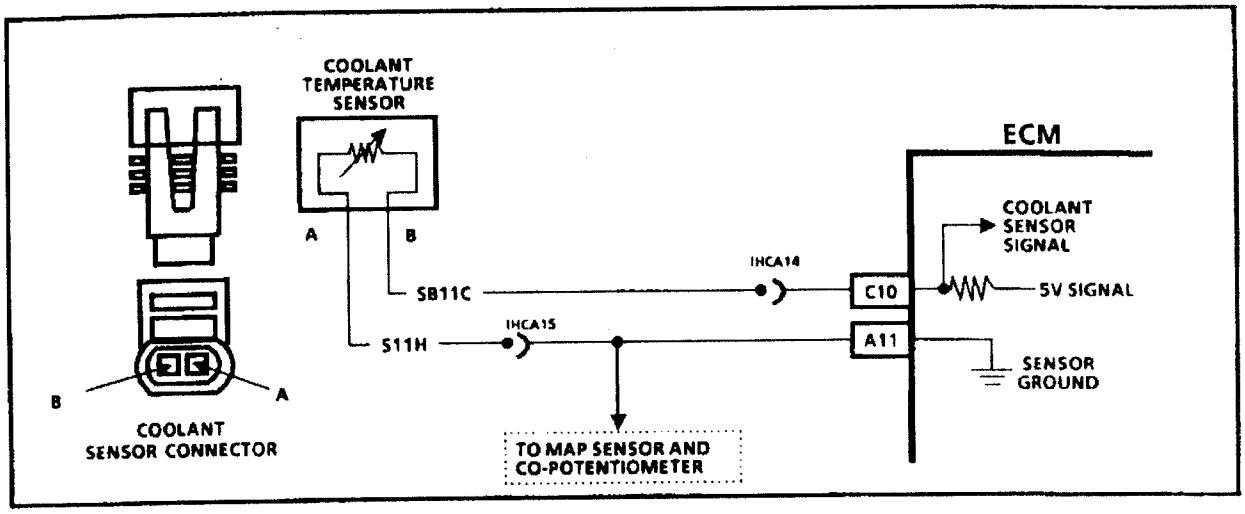

CODE 14

COOLANT TEMPERATURE SENSOR CIRCUIT
(SIGNAL VOLTAGE LOW - HIGH TEMPERATURE INDICATED)
1.6L TURBO LOTUS ELAN

Circuit Description:

The Coolant Temperature Sensor uses a thermistor to control the signal voltage at the ECM. The ECM applies a voltage on CKT SB11C to the sensor. When the engine is cold, the sensor (thermistor) resistance is high, therefore, the ECM will see high signal voltage.

As the engine warms, the sensor resistance becomes less, and the voltage drops. At normal engine operating temperature, the voltage will measure about 1.0 to 2.4 volts at the ECM terminal "C10".

Coolant temperature is one of the inputs used to control:

- Fuel delivery
- Engine Spark Timing (EST)
- Idle (IAC)
- Exhaust Gas Recirculation
- Secondary Throttles
- Boost Control
- Air Conditioning

Test Description:

Numbers below refer to circled numbers on the diagnostic chart.

1. Checks to see if code was set as result of hard failure or intermittent condition.
   Code 14 will set if:
   - Engine has been running for 2 minutes.
   - Signal Voltage indicates a coolant temperature above 145°C (275°F).
2. This test simulates conditions for a Code 15. If the ECM recognizes the open circuit (high voltage), and displays a low temperature, the ECM and wiring are OK.

Diagnostic Aids:

A code 14 will result if CKT SB11C is shorted to ground.

If Code 14 is intermittent, refer to Section ÉMK. 6.

"NON-SCAN" DIAGNOSTICS

CODE 14

COOLANT TEMPERATURE SENSOR CIRCUIT (SIGNAL VOLTAGE LOW - HIGH TEMPERATURE INDICATED) 1.6L TURBO LOTUS ELAN

(1)
- IGNITION "OFF", CLEAR CODES.
- DIAGNOSTIC TERMINAL NOT GROUNDED.
- START WARM ENGINE AND RUN FOR 2 MINUTES OR UNTIL "CHECK ENGINE" LIGHT COMES ON.
- IGNITION "ON", ENGINE STOPPED. GROUND DIAGNOSTIC TERMINAL AND NOTE CODE.

CODE 14

NO CODE 14 STORED.

PROBLEM IS INTERMITTENT. IF NO OTHER CODES WERE STORED, SEE INTERMITTENTS, IN SECTION EMK.6.

(2)
- DISCONNECT COOLANT SENSOR.
- IGNITION "ON" ENGINE STOPPED.
- CHECK VOLTAGE BETWEEN HARNESS CONNECTOR TERMINALS, CKT SB11C AND S11H.

BELOW 4 VOLTS

OVER 4 VOLTS

REPLACE SENSOR

- IGNITION "OFF"
- DISCONNECT ECM CONNECTORS.
- CHECK SIGNAL CKT SB11C FOR SHORT TO CKT S11H OR CHASSIS GROUND.

IF CKT SB11C IS OK, IT IS A FAULTY ECM.

COOLANT SENSOR TEMPERATURE TO RESISTANCE VALUES (APPROXIMATE)

°F	°C	OHMS
210	100	185
160	70	450
100	38	1,800
70	20	3,400
40	4	7,500
20	-7	13,500
0	-18	25,000
-40	-40	100,700

CLEAR CODES AND CONFIRM NO "CHECK ENGINE" LIGHT.

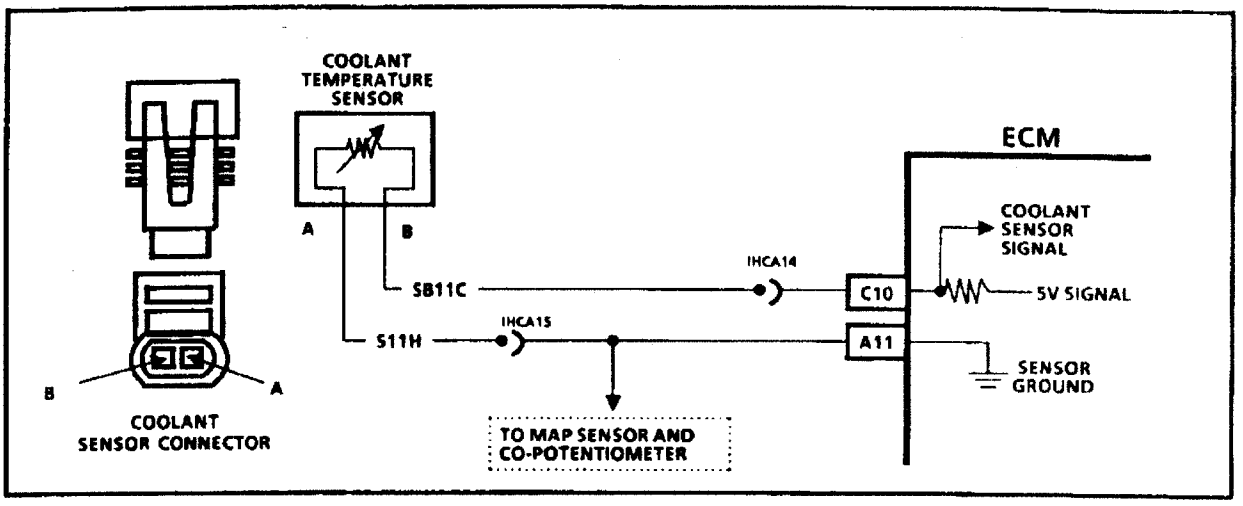

CODE 15

COOLANT TEMPERATURE SENSOR CIRCUIT
(SIGNAL VOLTAGE HIGH - LOW TEMPERATURE INDICATED)
1.6L TURBO LOTUS ELAN

Circuit Description:

The Coolant Temperature Sensor uses a thermistor to control the signal voltage at the ECM. The ECM applies a voltage on CKT SB11C to the sensor. When the engine is cold, the sensor (thermistor) resistance is high, therefore, the ECM will see high signal voltage.

As the engine warms, the sensor resistance becomes less, and the voltage drops. At normal engine operating temperature, the voltage will measure about 1.0 to 2.4 volts at the ECM terminal "C10".

Coolant temperature is one of the inputs used to control:

- Fuel delivery
- Engine Spark Timing (EST)
- Idle (IAC)
- Exhaust Gas Recirculation
- Secondary Throttles
- Boost Control
- Air Conditioning

Test Description:

Numbers below refer to circled numbers on the diagnostic chart.

1. Checks to see if code was set as result of hard failure or intermittent condition.
   Code 15 will set if:
   - The engine has been running for 1 minute.
   - Signal Voltage indicates a coolant temperature below -37°C.
2. This test simulates conditions for a Code 14. If the ECM recognizes the grounded circuit (low voltage), and displays a high temperature, the ECM and wiring are OK.
3. This test will determine if there is a wiring problem or a faulty ECM. If CKT S11H is open, there may also be a Code 33 stored. Be sure to carefully check terminals at the engine harness connectors.

Diagnostic Aids:

A Code 15 will result, if CKT's SB11C or S11H are open.

If Code 15 is intermittent, refer to Section EMK.6.

"NON-SCAN" DIAGNOSTICS

CODE 14

COOLANT TEMPERATURE SENSOR CIRCUIT (SIGNAL VOLTAGE LOW - HIGH TEMPERATURE INDICATED) 1.6L TURBO LOTUS ELAN

1
- IGNITION "OFF", CLEAR CODES.
- DIAGNOSTIC TERMINAL NOT GROUNDED.
- START WARM ENGINE AND RUN FOR 2 MINUTES OR UNTIL "CHECK ENGINE" LIGHT COMES ON.
- IGNITION "ON", ENGINE STOPPED. GROUND DIAGNOSTIC TERMINAL AND NOTE CODE.

CODE 14

2
- DISCONNECT COOLANT SENSOR.
- IGNITION "ON" ENGINE STOPPED.
- CHECK VOLTAGE BETWEEN HARNESS CONNECTOR TERMINALS, CKT SB11C AND S11H.

BELOW 4 VOLTS

- IGNITION "OFF"
- DISCONNECT ECM CONNECTORS.
- CHECK SIGNAL CKT SB11C FOR SHORT TO CKT S11H OR CHASSIS GROUND.

IF CKT SB11C IS OK, IT IS A FAULTY ECM.

OVER 4 VOLTS

REPLACE SENSOR

NO CODE 14 STORED.

PROBLEM IS INTERMITTENT. IF NO OTHER CODES WERE STORED, SEE INTERMITTENTS, IN SECTION EMK.6.

COOLANT SENSOR TEMPERATURE TO RESISTANCE VALUES (APPROXIMATE)

°F	°C	OHMS
210	100	185
160	70	450
100	38	1,800
70	20	3,400
40	4	7,500
20	-7	13,500
0	-18	25,000
-40	-40	100,700

CLEAR CODES AND CONFIRM NO "CHECK ENGINE" LIGHT.

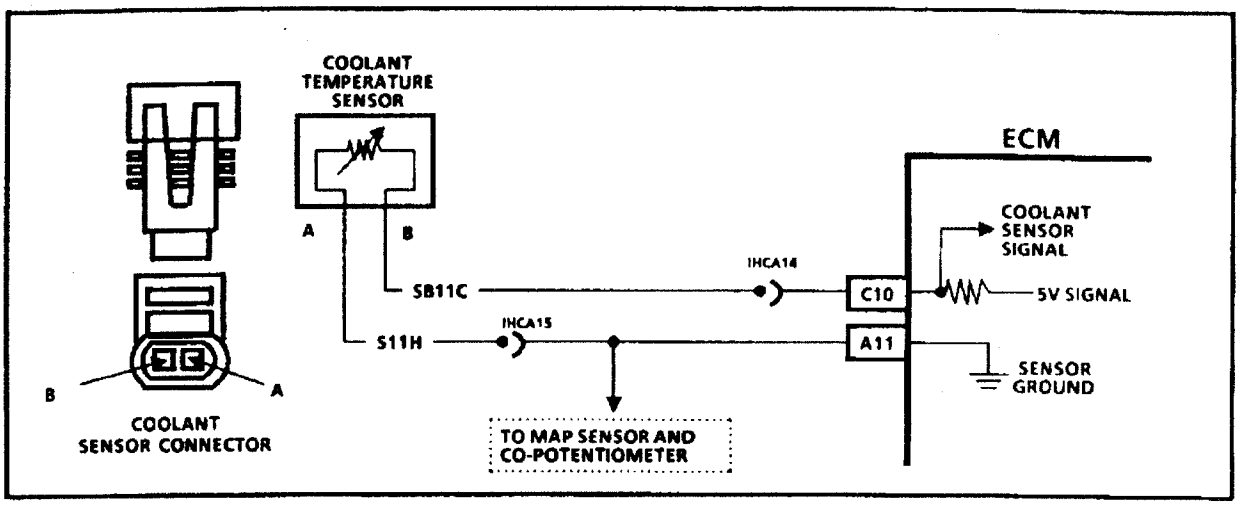

CODE 15

COOLANT TEMPERATURE SENSOR CIRCUIT
(SIGNAL VOLTAGE HIGH - LOW TEMPERATURE INDICATED)
1.6L TURBO LOTUS ELAN

Circuit Description:

The Coolant Temperature Sensor uses a thermistor to control the signal voltage at the ECM. The ECM applies a voltage on CKT SB11C to the sensor. When the engine is cold, the sensor (thermistor) resistance is high, therefore, the ECM will see high signal voltage.

As the engine warms, the sensor resistance becomes less, and the voltage drops. At normal engine operating temperature, the voltage will measure about 1.0 to 2.4 volts at the ECM terminal "C10".

Coolant temperature is one of the inputs used to control:

- Fuel delivery
- Engine Spark Timing (EST)
- Idle (IAC)
- Exhaust Gas Recirculation
- Secondary Throttles
- Boost Control
- Air Conditioning

Test Description:

Numbers below refer to circled numbers on the diagnostic chart.

1. Checks to see if code was set as result of hard failure or intermittent condition.
   Code 15 will set if:
   - The engine has been running for 1 minute.
   - Signal Voltage indicates a coolant temperature below -37°C.
2. This test simulates conditions for a Code 14. If the ECM recognizes the grounded circuit (low voltage), and displays a high temperature, the ECM and wiring are OK.
3. This test will determine if there is a wiring problem or a faulty ECM. If CKT S11H is open, there may also be a Code 33 stored. Be sure to carefully check terminals at the engine harness connectors.

Diagnostic Aids:

A Code 15 will result, if CKT's SB11C or S11H are open.

If Code 15 is intermittent, refer to Section EMK.6.

"NON-SCAN" DIAGNOSTICS

CODE 15

COOLANT TEMPERATURE SENSOR CIRCUIT (SIGNAL VOLTAGE HIGH - LOW TEMPERATURE INDICATED) 1.6L TURBO LOTUS ELAN

(1)
- IGNITION "OFF", CLEAR CODES.
- DIAGNOSTIC TERMINAL NOT GROUNDED.
- START WARM ENGINE IN W.O.T. (CLEAR FLOOD)
- RUN FOR 2 MINUTES OR UNTIL "CHECK ENGINE" LIGHT COMES ON.
- IGNITION "ON", ENGINE STOPPED.
- GROUND DIAGNOSTIC TERMINAL AND NOTE CODE.

CODE 15

(2)
- DISCONNECT COOLANT SENSOR, JUMPER HARNESS CONNECTOR TERMINALS A TO B.
- CLEAR CODES
- RUN ENGINE FOR 2 MINUTES OR UNTIL CHECK ENGINE LIGHT COMES ON
- IGNITION "ON", ENGINE STOPPED
- GROUND DIAGNOSTIC TERMINAL, NOTE CODE.

CODE 14

FAULTY COOLANT SENSOR CONNECTION OR FAULTY SENSOR

CODE 15

- PROBE COOLANT SENSOR CKT SB11C WITH A VOLTMETER TO GROUND.
- SHOULD BE 4-6 VOLTS.

VOLTAGE OK

(3)
- CHECK FOR OPEN CKT S11H.
- IF NOT OPEN, IT IS FAULTY ECM CONNECTION OR ECM.

VOLTAGE NOT OK

- CHECK FOR OPEN CKT SB11C.
- IF NOT OPEN, IT IS FAULTY ECM CONNECTION OR ECM.

NO CODE 15.

PROBLEM IS INTERMITTENT. IF NO OTHER CODES WERE STORED, SEE INTERMITTENTS, SECTION EMK. 6.

COOLANT SENSOR TEMPERATURE TO RESISTANCE VALUES (APPROXIMATE)

°F	°C	OHMS
275	135	68
210	100	185
160	70	450
100	38	1,800
70	20	3,400
40	4	7,500
20	-7	13,500
0	-18	25,000
-22	-30	53,000
-40	-40	100,700

CLEAR CODES AND CONFIRM NO "CHECK ENGINE" LIGHT.

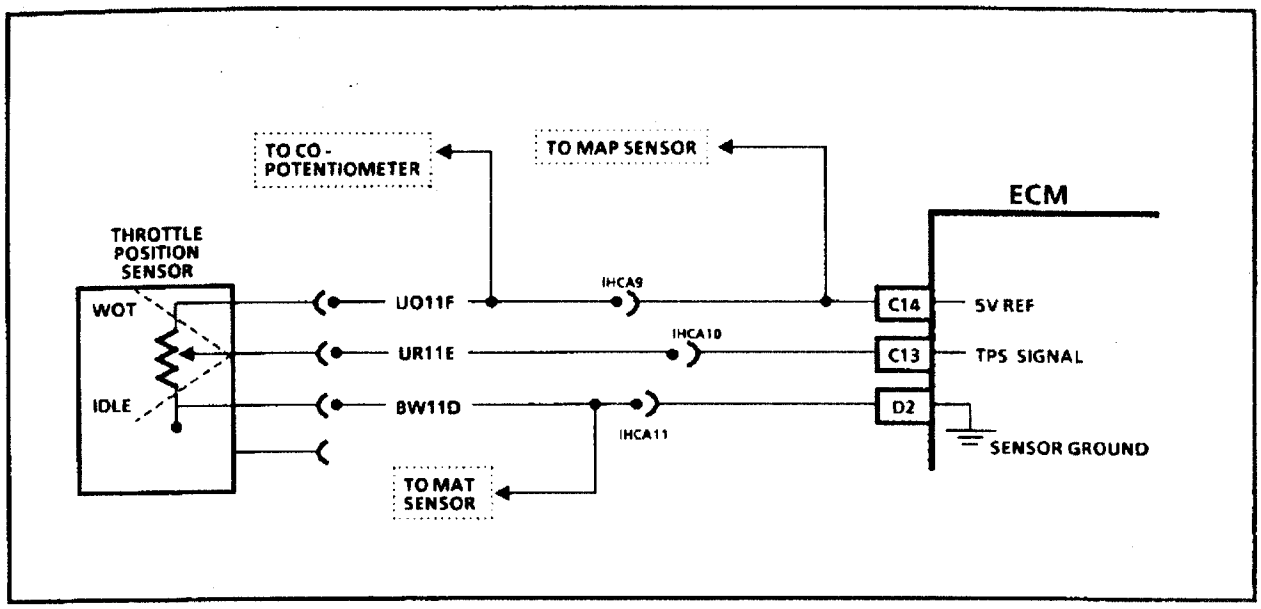

CODE 21

THROTTLE POSITION SENSOR (TPS) CIRCUIT
(SIGNAL VOLTAGE HIGH)
1.6L TURBO LOTUS ELAN

Circuit Description:

The Throttle Position Sensor (TPS) provides a voltage signal that changes relative to the throttle valve position. Signal voltage will vary from 0.4 ± 0.02 volts at idle to about 4.0 volts at wide open throttle (WOT).

The TPS signal is one of the most important inputs used by the ECM for fuel control and for many of the ECM controlled outputs.

Test Description:

Numbers below refer to circled numbers on the diagnostic chart.

1. This step checks to see if Code 21 is the result of a hard failure or an intermittent condition.
   A Code 21 will set if:
   - TPS reading above 4.7 volts.
   - Engine speed less than 1800 rpm.
   - MAP reading below 45 kPa.
   - All of the above conditions present for 5 seconds.
2. This step simulates conditions for a Code 22. If the ECM recognizes the change of state, the ECM and CKTs UO11F and UR11E are OK.
3. This step isolates a faulty sensor, ECM, or an open CKT BW11D. If it is determined CKT BW11D is the fault be sure to check the terminals at the injector harness connector.

Diagnostic Aids:

Closed throttle voltage should be 0.4 ± 0.02 volts, TPS voltage should increase at a steady rate as throttle is moved to WOT.

A Code 21 will result if CKT BW11D is open or CKT UR11E is shorted to voltage. If Code 21 is intermittent, refer to Section EMK. 6.

"NON-SCAN" DIAGNOSTICS

CODE 21

THROTTLE POSITION SENSOR (TPS) CIRCUIT (SIGNAL VOLTAGE HIGH) 1.6L TURBO LOTUS ELAN

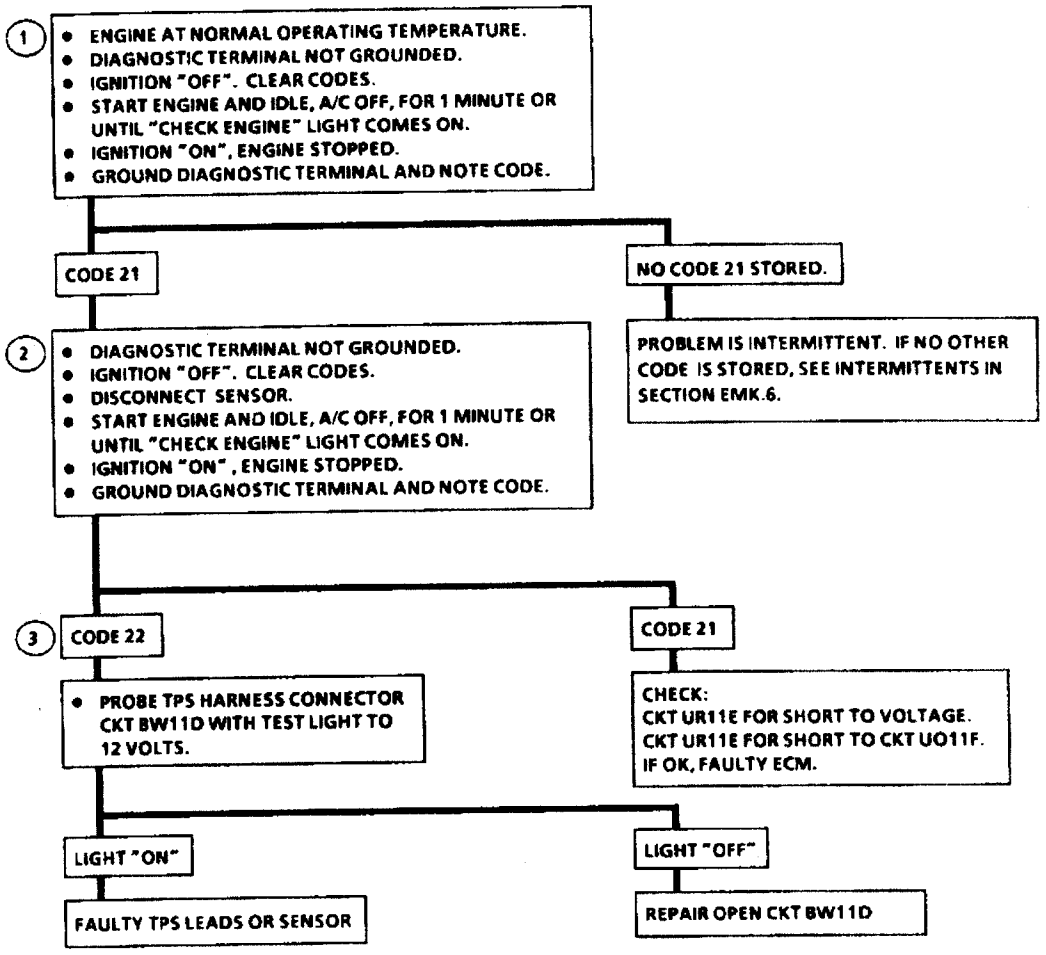

CLEAR CODES AND CONFIRM NO "CHECK ENGINE" LIGHT.

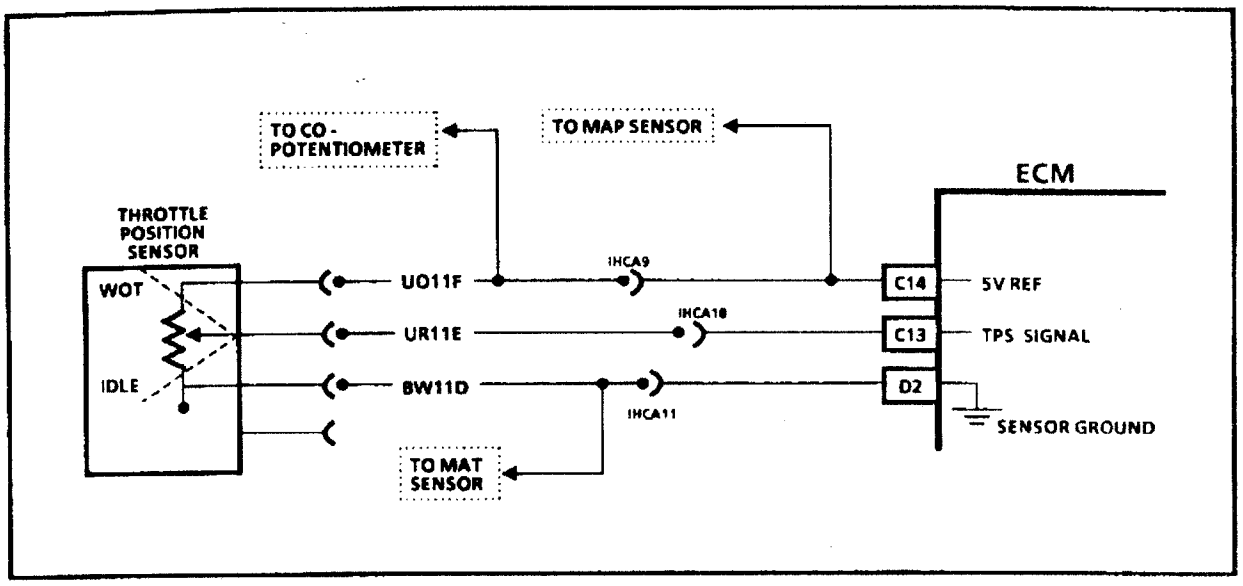

CODE 22

THROTTLE POSITION SENSOR (TPS) CIRCUIT
(SIGNAL VOLTAGE LOW)
1.6L TURBO LOTUS ELAN

Circuit Description:

The Throttle Position Sensor (TPS) provides a voltage signal that changes, relative to the throttle valve position. Signal voltage will vary from 0.4 ± 0.02 volts at idle to about 4.0 volts at wide open throttle (WOT).

The TPS signal is one of the most important inputs used by the ECM for fuel control and for many of the ECM controlled outputs.

Test Description:

Numbers below refer to circled numbers on the diagnostic chart.

1. This step checks to see if Code 22 is the result of a hard failure or an intermittent condition.
   A Code 22 will set if:
   - The engine is running.
   - TPS voltage is below .20 volts.
2. This step simulates conditions for a Code 21. If a Code 21 is set, or the ECM wiring are OK, indicating a faulty TPS sensor.
3. This step checks for the reference signal to CKT UO11F.
4. If voltage is present then, CKT UR11E may be open or have a short to ground, or ECM connector terminal or ECM itself may be faulty.
5. An internally shorted MAP sensor could pull down 5 volt REF voltage.
6. If CKT UO11F is open or shorted to ground, there may also be a stored Code 34.

Diagnostic Aids:

Closed throttle voltage should be 0.4 ± 0.02 volts. TPS voltage should increase at a steady rate as throttle is moved to WOT.

An open or grounded UO11F or UR11E will result in a Code 22.

If Code 22 is intermittent, refer to Section EMK. 6.

"NON-SCAN" DIAGNOSTICS

CODE 22

THROTTLE POSITION SENSOR (TPS) CIRCUIT (SIGNAL VOLTAGE LOW) 1.6L TURBO LOTUS ELAN

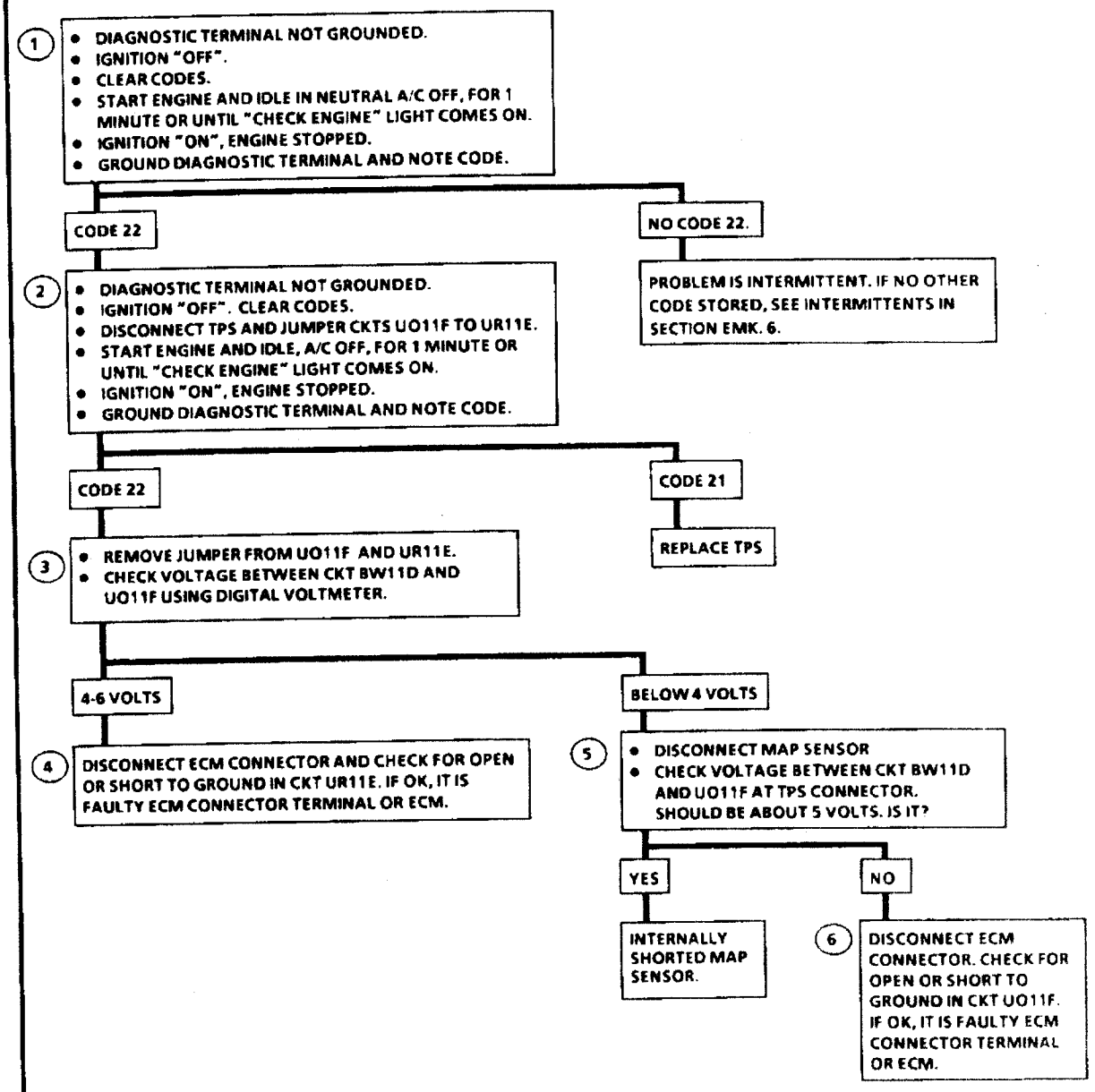

CLEAR CODES AND CONFIRM NO "CHECK ENGINE" LIGHT.

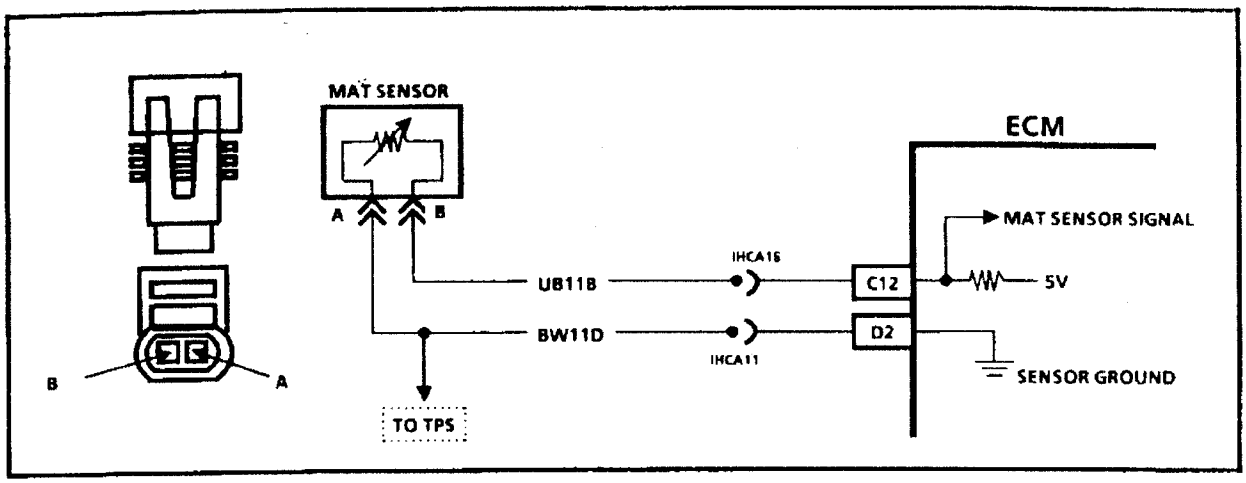

CODE 23

MANIFOLD AIR TEMPERATURE (MAT) SENSOR CIRCUIT
(LOW TEMPERATURE INDICATED)
1.6L TURBO LOTUS ELAN

Circuit Description:

The Manifold Air Temperature Sensor uses a thermistor to control the signal voltage to the ECM. The ECM applies a voltage of about 5 volts on CKT UB11B to the sensor. When manifold air is cold, the sensor (thermistor) resistance is high, therefore, the ECM will see a high signal voltage. As the air warms, the sensor resistance becomes less and the voltage drops.

Test Description:

Numbers below refer to circled numbers on the diagnostic chart.

1. A Code 23 will set due to an open circuit with engine running for more than 1 minute. This test will determine if the wiring and ECM are OK.
2. If the resistance is greater than 25,000 ohms, replace the sensor. Code set after 25 seconds engine run 1 minute after start.
3. In case of open CKT BW11D a Code 21 would be stored also.

Diagnostic Aids:

If Code 23 is intermittent, refer to section EMK. 6.

"NON-SCAN" DIAGNOSTICS

CODE 23

MANIFOLD AIR TEMPERATURE (MAT) SENSOR CIRCUIT (SIGNAL VOLTAGE HIGH) 1.6L TURBO LOTUS ELAN

1
- DISCONNECT MAT SENSOR
- IGNITION "ON", ENGINE STOPPED.
- CHECK VOLTAGE BETWEEN HARNESS CONNECTOR TERMINALS CKT UB11B AND BW11D

OVER 4 VOLTS

2
- CHECK RESISTANCE ACROSS SENSOR TERMINALS. SHOULD BE LESS THAN 100,000 OHMS. SEE TABLE FOR APPROXIMATE TEMPERATURE TO SENSOR RESISTANCE VALUES.

OK

INTERMITTENT FAULT IN SENSOR CIRCUIT OR CONNECTOR. IF ADDITIONAL CODES WERE STORED, SEE APPLICABLE CHART. IF NO CODES, REFER TO SYMPTOMS IN SECTION EMK. 6.

NOT OK

REPLACE SENSOR

BELOW 4 VOLTS

- CHECK VOLTAGE BETWEEN HARNESS CONNECTOR CKT UB11B AND GROUND.

OVER 4 VOLTS

3
- CHECK FOR OPEN IN CKT BW11D AND CHECK TERMINAL CONNECTIONS.

IF WIRE AND CONNECTIONS ARE OK, IT IS A FAULTY ECM.

BELOW 4 VOLTS

- CHECK FOR OPEN IN CKT UB11B AND CHECK TERMINAL CONNECTIONS.

IF WIRE AND CONNECTIONS ARE OK, IT IS A FAULTY ECM.

DIAGNOSTIC AID

MAT SENSOR		
TEMPERATURE TO RESISTANCE VALUES (APPROXIMATE)		
°F	°C	OHMS
210	100	185
160	70	450
100	38	1,800
70	20	3,400
40	4	7,500
20	-7	13,500
0	-18	25,000
-40	-40	100,700

CLEAR CODES AND CONFIRM NO "CHECK ENGINE" LIGHT.

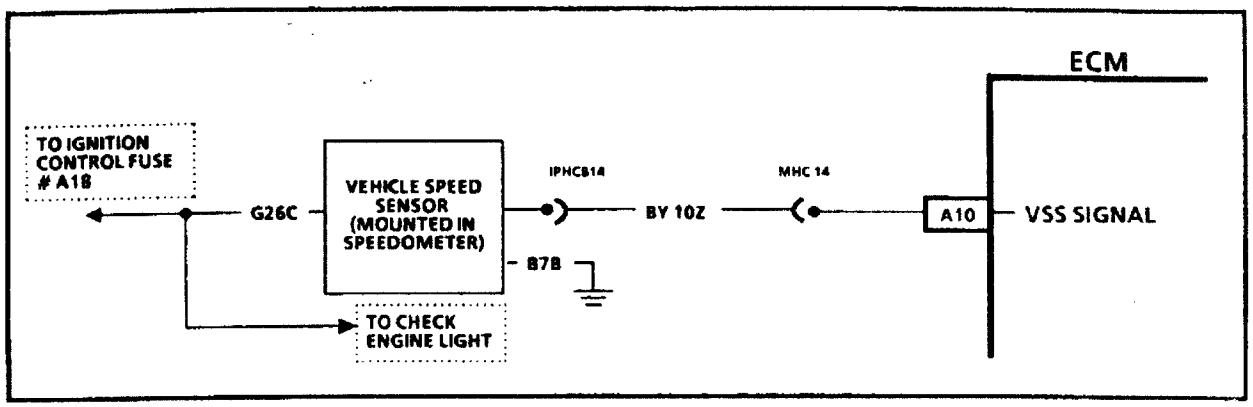

CODE 24

VEHICLE SPEED SENSOR (VSS) CIRCUIT 1.6L TURBO LOTUS ELAN

Circuit Description:

Vehicle speed information is provided to the ECM by the vehicle speed sensor which is an optical device mounted in the back of the speedometer head. The VSS driven by the tacho cable produces electrical pulses which the ECM uses to calculate mph or kph.

Test Description:

Numbers below refer to circled numbers on the diagnostic chart.

1. Code 24 will set if vehicle speed is less than 2 mph when:
   - Engine speed is between 2400 and 4400 rpm.
   - MAP signal is lower than 20 kPa.
   - All conditions met for 10 seconds.
   - No Code 21, 22, 33 or 34.

   These conditions are met during a road load operation. Disregard Code 24 that sets when drive wheels are not turning.

Diagnostic Aids:

A voltmeter should indicate a voltage whenever the wheels are turning.

Check CKT's BY10Z, G26C and B7B for proper connections. Be sure they are clean and tight and the harness is routed correctly.

If Code 24 is intermittent, refer to Section EMK. 6.

"NON-SCAN" DIAGNOSTICS

CODE 24

VEHICLE SPEED SENSOR (VSS) CIRCUIT 1.6L TURBO LOTUS ELAN

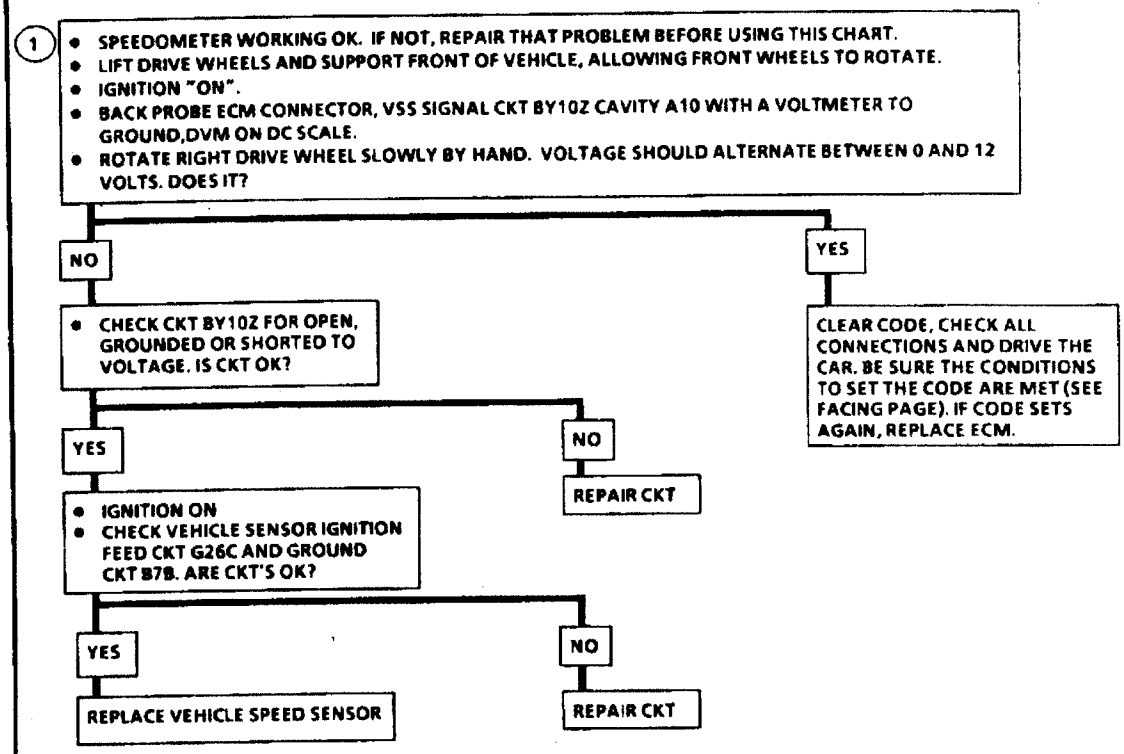

CLEAR CODES AND CONFIRM NO "CHECK ENGINE" LIGHT.

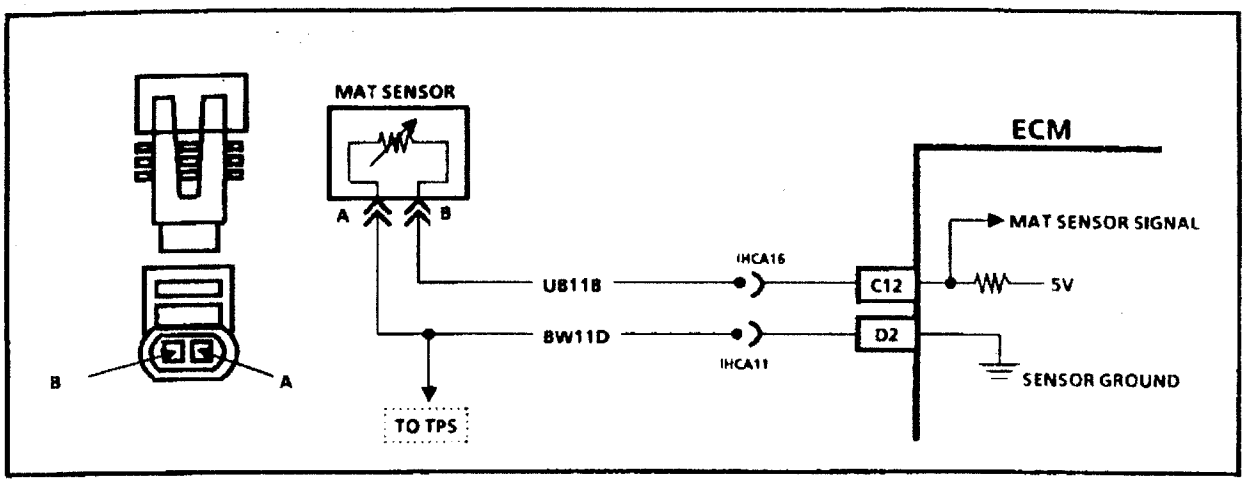

CODE 25

MANIFOLD AIR TEMPERATURE (MAT) SENSOR CIRCUIT
(HIGH TEMPERATURE INDICATED)
1.6L TURBO LOTUS ELAN

Circuit Description:

The Manifold Air Temperature Sensor uses a thermistor to control the signal voltage to the ECM. The ECM applies a voltage of about 5 volts on CKT UB11B to the sensor. When manifold air is cold, the sensor (thermistor) resistance is high, therefore, the ECM will see a high signal voltage. As the air warms, the sensor resistance becomes less and the voltage drops.

Test Description:

Numbers below refer to circled numbers on the diagnostic chart.

Code 25 is set, if

- Engine has been running for at least 2 minutes.
- MAT voltage is lower than 0.2 volts.

1. If voltage is above 4 volts, the ECM and wiring are OK. If resistance is less than 185 ohms, replace the sensor.
2. See "Temperature to Resistance Values" on facing page.

Diagnostic Aids:

The "Temperature To Resistance Value" scale at the right may be used to test the MAT sensor at various temperature levels to evaluate the possibility of a "slewed" (mis-scaled) sensor. A "slewed" sensor could result in poor driveability complaints.

If Code 25 is intermittent, refer to Section EMK. 6.

"NON-SCAN" DIAGNOSTICS

CODE 25

MANIFOLD AIR TEMPERATURE (MAT) SENSOR CIRCUIT (SIGNAL VOLTAGE LOW) 1.6L TURBO LOTUS ELAN

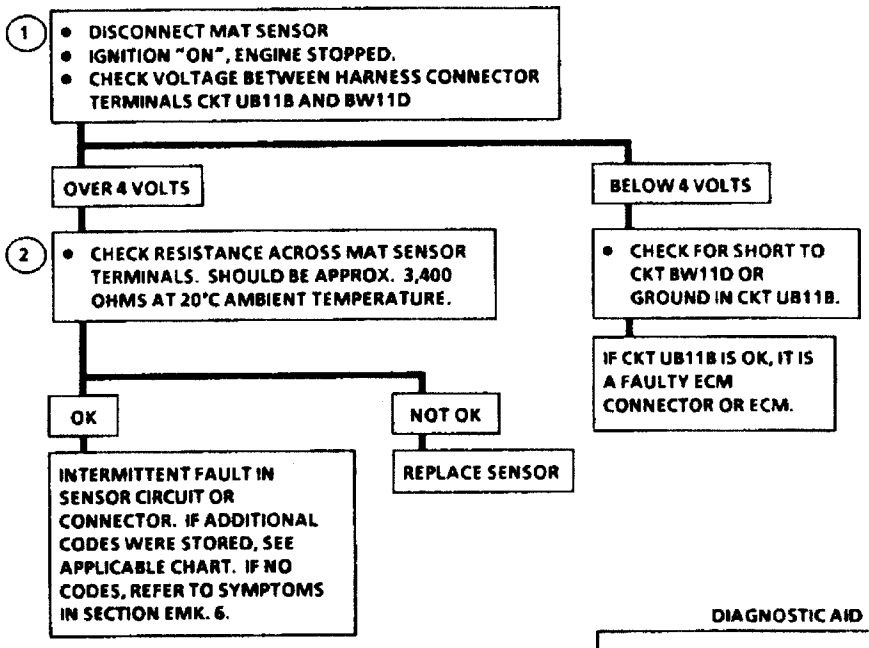

DIAGNOSTIC AID

MAT SENSOR		
TEMPERATURE TO RESISTANCE VALUES (APPROXIMATE)		
°F	°C	OHMS
210	100	185
160	70	450
100	38	1,800
70	20	3,400
40	4	7,500
20	-7	13,500
0	-18	25,000
-40	-40	100,700

CLEAR CODES AND CONFIRM NO "CHECK ENGINE" LIGHT.

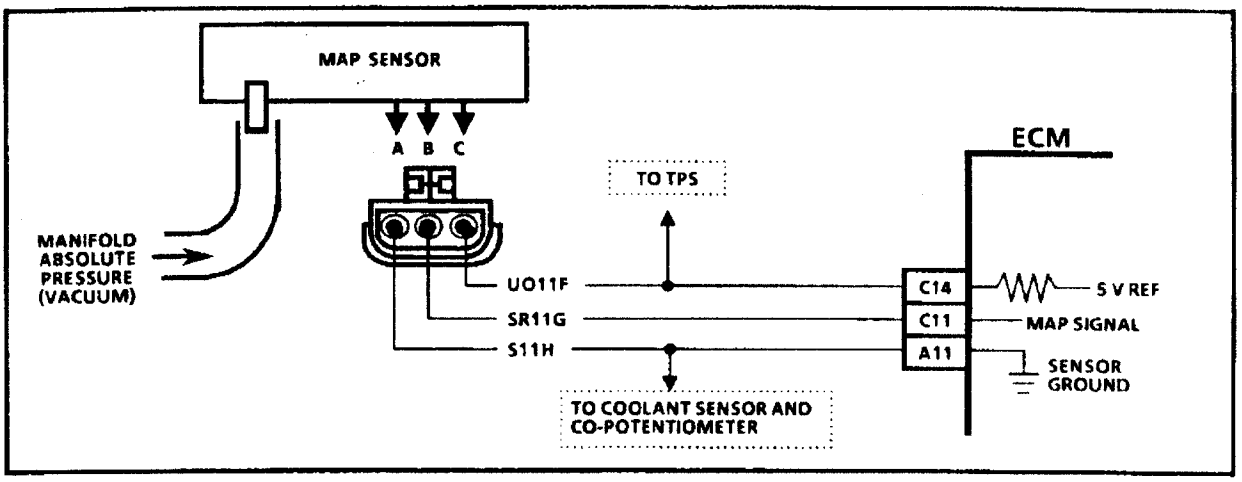

CODE 31/33

MANIFOLD ABSOLUTE PRESSURE (MAP) SENSOR CIRCUIT
(SIGNAL VOLTAGE HIGH - LOW VACUUM)
1.6L TURBO LOTUS ELAN

Circuit Description:

The Manifold Absolute Pressure (MAP) Sensor responds to changes in manifold pressure (vacuum). The ECM receives this information as a signal voltage that will vary from about 0.6 to 1.0 volts, at closed throttle idle, to 4.0 to 4.5 volts at wide open throttle and full boost.

If the MAP sensor fails, the ECM will substitute a fixed MAP value and use the Throttle Position Sensor (TPS) to control fuel delivery.

Test Description:

Numbers below refer to circled numbers on the diagnostic chart.

1. This step will determine if Code 33 is the result of a hard failure or an intermittent condition.
   A Code 33 will set if:
   - MAP signal indicates greater than 110 kPa (over 2.6V) with A/C "OFF".
   - TPS less than 1.0%.
   - These conditions are present for a time longer than 0.2 seconds.
2. This step simulates conditions for a Code 34. If the ECM recognizes the change, the ECM, and CKT's UO11F and SR11G, are OK. If CKT S11H is open, there may also be a Code 15 stored.

Diagnostic Aids:

With the ignition "ON" and the engine stopped, the manifold pressure is equal to atmospheric pressure and the signal voltage will be high. This information is used by the ECM as an indication of vehicle altitude and is referred to as BARO. Comparison of this BARO reading with a known good vehicle with the same sensor is a good way to check accuracy of a "suspect" sensor. Readings should be the same ± .4 volt.

A Code 33 will result if CKT S11H is open, or if CKT SR11G is shorted to voltage or to CKT UO11F.

If Code 33 is intermittent, refer to Section EMK. 6.

"NON-SCAN" DIAGNOSTICS

CODE 31/33

MANIFOLD ABSOLUTE PRESSURE (MAP) SENSOR CIRCUIT (SIGNAL VOLTAGE HIGH - LOW VACUUM) 1.6L TURBO LOTUS ELAN

IF ENGINE IDLE IS ROUGH, UNSTABLE, OR INCORRECT, CORRECT BEFORE USING CHART. SEE SYMPTOMS SECTION EMK. 6.

(1)
- IGNITION "OFF", CLEAR CODES.
- DIAGNOSTIC TERMINAL NOT GROUNDED.
- START ENGINE AND RUN FOR 1 MINUTE OR UNTIL "CHECK ENGINE" LIGHT COMES ON.
- IGNITION "ON", ENGINE STOPPED. GROUND DIAGNOSTIC TERMINAL AND NOTE CODE.

CODE 31/33

NO CODE 31/33

PROBLEM IS INTERMITTENT. IF NO OTHER CODES WERE STORED, SEE INTERMITTENTS, SECTION EMK. 6.

(2)
- IGNITION "OFF", CLEAR CODES.
- DISCONNECT MAP SENSOR ELECTRICAL CONNECTOR.
- DIAGNOSTIC TERMINAL NOT GROUNDED.
- START ENGINE AND RUN FOR 1 MINUTE OR UNTIL "CHECK ENGINE" LIGHT COMES ON.
- IGNITION "ON", ENGINE STOPPED.
- GROUND DIAGNOSTIC TERMINAL AND NOTE CODE.

CODE 31/33

- CHECK FOR SHORT TO CKT U011F OR VOLTAGE IN CKT SR11G

IF CKT SR11G IS OK, REPLACE ECM

CODE 34

- CHECK FOR PLUGGED OR LEAKING SENSOR VACUUM HOSE.
- IF VACUUM HOSE OK, CHECK FOR OPEN IN GROUND CKT S11H.

IF CKT S11H IS OK, REPLACE SENSOR

CLEAR CODES AND CONFIRM NO "CHECK ENGINE" LIGHT.

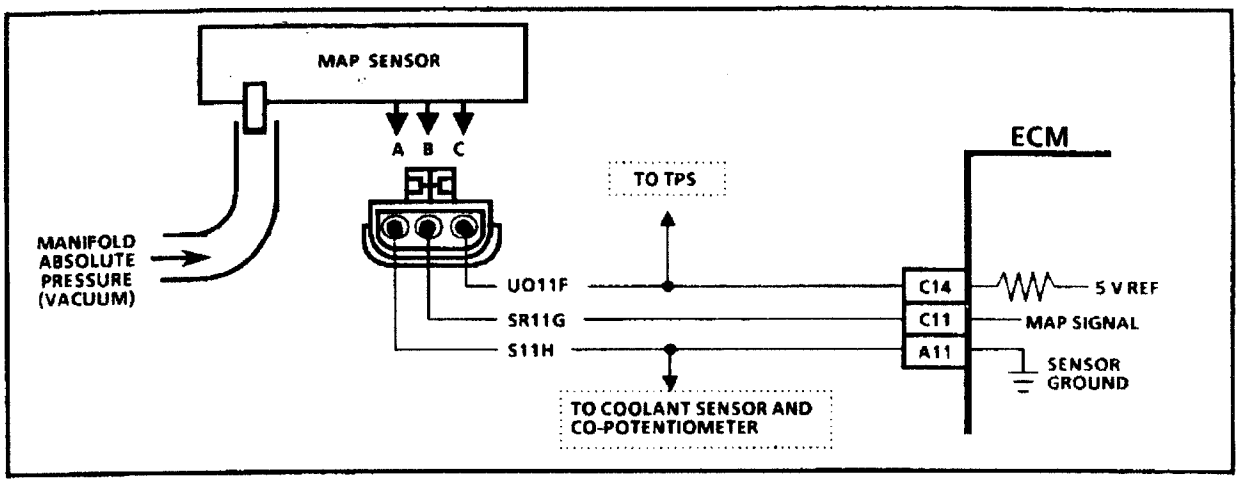

CODE 34

MANIFOLD ABSOLUTE PRESSURE (MAP) SENSOR CIRCUIT
(SIGNAL VOLTAGE LOW - HIGH VACUUM)
1.6L TURBO LOTUS ELAN

Circuit Description:

The Manifold Absolute Pressure (MAP) Sensor responds to changes in manifold pressure (vacuum). The ECM receives this information as a signal voltage that will vary from about 0.6 to 1.0 volts at closed throttle idle, to 4.0 to 4.5 volts at wide open throttle and full boost.

If the MAP sensor fails, the ECM will substitute a fixed MAP value and use the Throttle Position Sensor (TPS) to control fuel delivery.

Test Description:

Numbers below refer to circled numbers on the diagnostic chart.

1. This step determines if Code 34 is the result of a hard failure or an intermittent condition.
   A Code 34 will set when:
   - MAP reading is less than 14 kPa.
   - Engine rpm is less than 1200 rpm.

   OR
   - MAP reading is less than 14 kPa.
   - Engine rpm is greater than 1200 rpm.
   - TPS is less than 3.5%.
2. Jumpering harness terminals "B" to "C", 5 volt to signal, will determine if the sensor is at fault, or if there is a problem with the ECM or wiring.

Diagnostic Aids:

With the ignition "ON" and the engine stopped, the manifold pressure is equal to atmospheric pressure and the signal voltage will be high. This information is used by the ECM as an indication of vehicle altitude and is referred to as BARO. Comparison of this BARO reading with a known good vehicle with the same sensor is a good way to check accuracy of a "suspect" sensor. Readings should be the same ± .4 volt.

A Code 34 will result if CKTs are open or shorted to ground

If Code 34 is intermittent, refer to Section EMK. 6.

An internally shorted TPS sensor will cause a Code 34.

"NON-SCAN" DIAGNOSTICS

CODE 34

MANIFOLD ABSOLUTE PRESSURE (MAP) SENSOR CIRCUIT (SIGNAL VOLTAGE LOW - HIGH VACUUM) 1.6L TURBO LOTUS ELAN

(1)
- IGNITION "OFF", CLEAR CODES.
- DIAGNOSTIC TERMINAL NOT GROUNDED.
- START ENGINE AND RUN FOR 1 MINUTE OR UNTIL "CHECK ENGINE" LIGHT COMES ON.
- IGNITION "ON", ENGINE STOPPED.
- GROUND DIAGNOSTIC TERMINAL AND NOTE CODE.

CODE 34

NO CODE 34.

PROBLEM IS INTERMITTENT. IF NO OTHER CODES WERE STORED, SEE "INTERMITTENTS", SECTION EMK. 6.

(2)
- IGNITION "OFF", CLEAR CODES.
- DISCONNECT MAP SENSOR AND JUMPER HARNESS CONNECTOR TERMINAL "B" TO "C".
- DIAGNOSTIC TERMINAL NOT GROUNDED.
- START ENGINE AND RUN FOR 1 MINUTE.
- OR UNTIL "CHECK ENGINE" LIGHT COMES ON. IGNITION "ON", ENGINE STOPPED.
- GROUND DIAGNOSTIC TERMINAL AND NOTE CODE.

CODE 34

CODE 33

REPLACE SENSOR

- REMOVE JUMPER FROM TERMINAL "B" TO "C".
- CHECK VOLTAGE BETWEEN HARNESS CONNECTOR TERMINAL "A" AND "C" USING VOLTMETER

4 TO 6 VOLTS

- CHECK FOR OPEN OR SHORT TO GROUND IN CKT SR11GINTERNALLY SHORTED TPS SENSOR

IF CKT SR11G IS OK, FAULTY ECM CONNECTOR TERMINAL OR ECM.

BELOW 4 VOLTS

- CHECK CKT U011F FOR OPEN OR SHORTED TO GROUND.
- CHECK FOR INTERNALLY SHORTED TPS.

IF OK, FAULTY ECM CONNECTOR TERMINAL OR ECM.

CLEAR CODES AND CONFIRM NO "CHECK ENGINE" LIGHT.

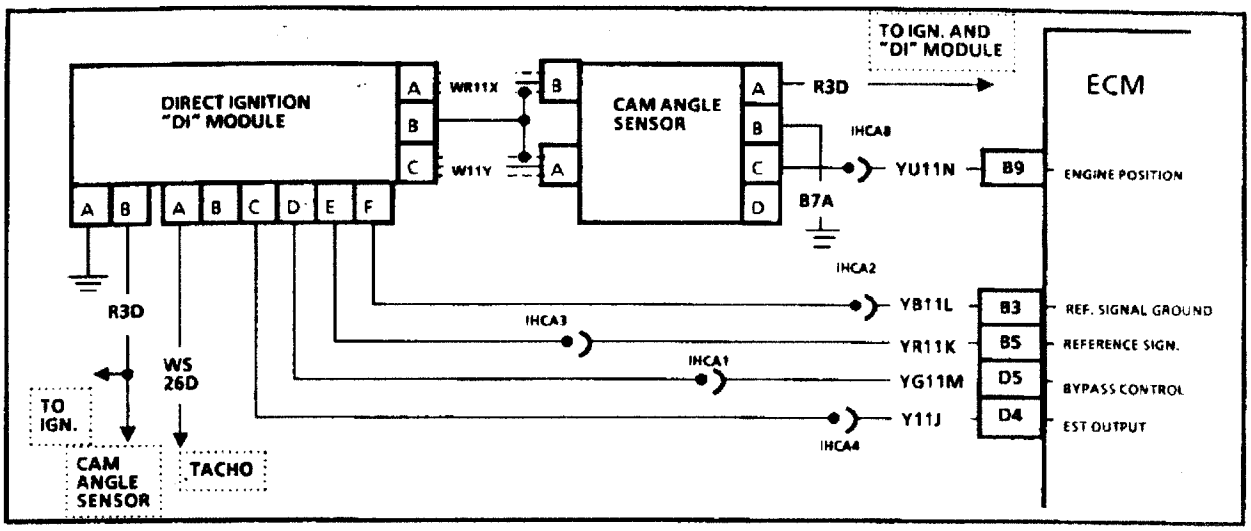

CODE 41

ENGINE SPEED SIGNAL MISSING
1.6L TURBO LOTUS ELAN

Circuit Description:

The engine speed signal is a 0 to 5 volts digital input to the ECM which occurs at a frequency of once per camshaft revolution. It is generated by the cam angle sensor located at the end of the camshaft. The signal is used by the ECM to set the alternating firing of the injectors.

Code 41 will set under the following conditions: The ECM does not receive signal pulses for more than 20 engine revolutions, or it does not receive signal pulses for more than 5 seconds.

Test Description:

Numbers below refer to circled numbers on the diagnostic chart.

1. Code 41 will set under the following conditions:
   The ECM does not receive signal pulses for more than 20 engine revolutions,
   or
   it does not receive signal pulses for more than 5 seconds.
2. The ECM supplies 5 volts on CKT YU11N. The cam angle sensor pulls down this voltage to ground once every 360° cam angle degrees.

Diagnostic Aids:

An intermittent may be caused by a poor connection, rubbed through wire insulation, or a wire broken inside the insulation.

- Clear code and check (wiggle) pin B9 at ECM, wiring and cam angle sensor connector in order to see if code resets.

"NON - SCAN" DIAGNOSTICS

CODE 41

ENGINE SPEED SIGNAL MISSING 1.6L TURBO LOTUS ELAN

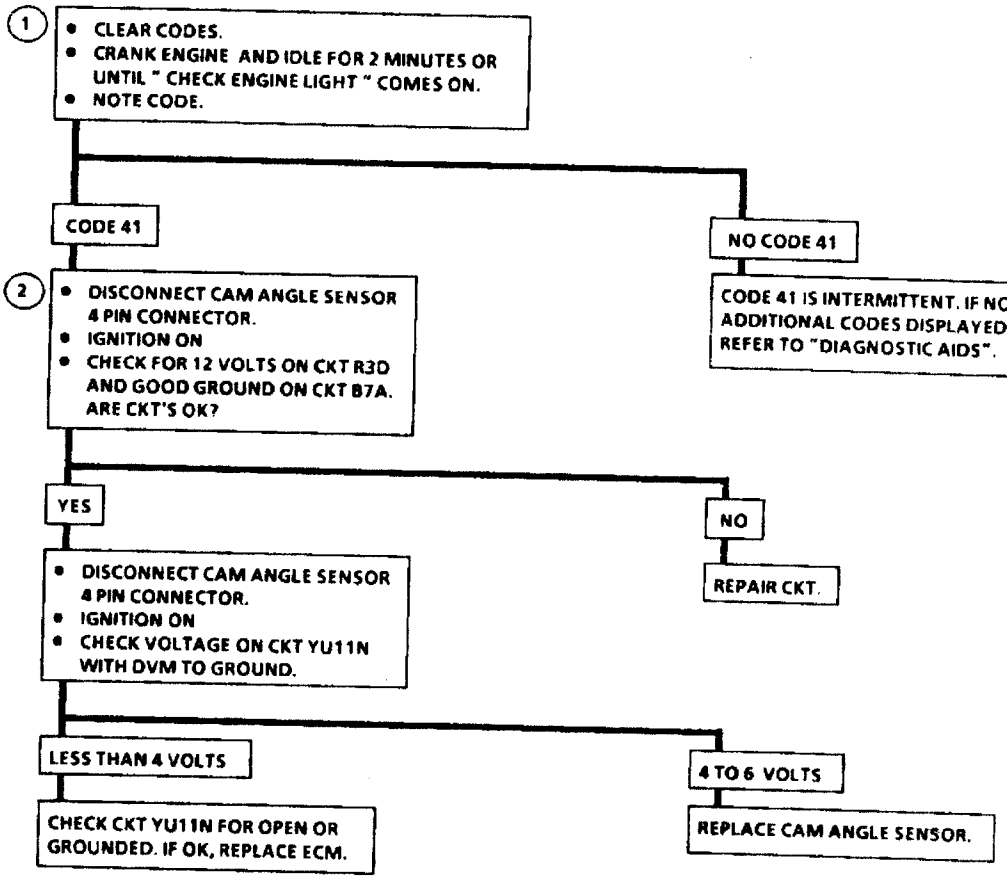

CLEAR CODES AND CONFIRM NO "CHECK ENGINE LIGHT".

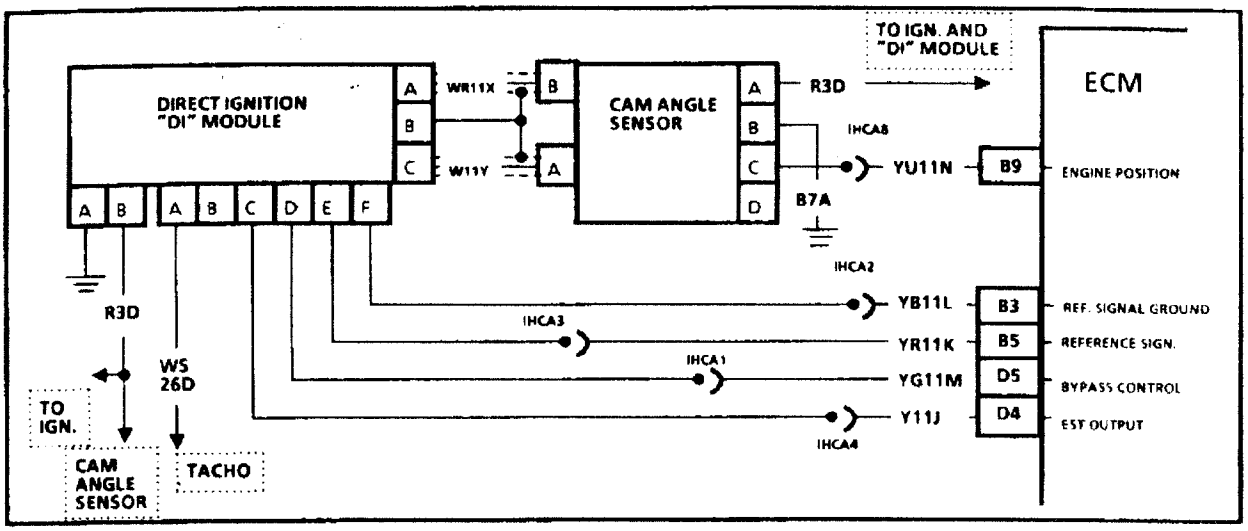

CODE 42

ELECTRONIC SPARK TIMING (EST) CIRCUIT 1.6L TURBO LOTUS ELAN

Circuit Description:

The ignition module sends a reference signal on CKT YR11K to the ECM, when the engine is cranking. While the engine speed is under 800 rpm, the ignition module will control ignition timing. When the engine speed exceeds 800 rpm, the ECM applies 5 volts to the "bypass" line CKT YG11M to switch the timing to ECM control on EST CKT Y11J.

When the system is running on the ignition module, that is, no voltage on the bypass line, the ignition module grounds the EST signal. The ECM expects to see no voltage on the EST line during this condition,. If it sees a voltage, is sets Code 42 and will not go into the EST mode.

When the rpm for EST is reached (about 800 rpm), voltage will be applied to be bypass line, the EST should no longer be grounded in the ignition module, so the EST voltage should be varying.

If the bypass line is open or grounded, the ignition module will not switch to EST mode, so, the EST voltage will be low and Code 42 will be set.

If the EST line is grounded, the ignition module will switch to EST but, because the line is grounded, there will be no EST signal. A Code 42 will be set.

Test Description:

Numbers below refer to circled numbers on the diagnostic chart.

1. Code 42 means the ECM has seen an open or short to ground in the EST or by-pass circuits. This test confirms Code 42 and that the fault causing the code is present.
2. Checks for a normal EST ground path through the ignition module. An EST CKT Y11J, shorted to ground, will also read less than 500 ohms, however, this will be checked later.
3. As the test light voltage touches CKT YG 11M, the module should switch, causing the ohmmeter to "overrange", if the meter is in the 1000-2000 ohms position. Selecting the 10 - 20,000 ohms position will indicate above 5000 ohms. The important thing is that the module "switched".
4. The module did not switch and this step checks for:
   - EST CKT Y11J shorted to ground.
   - Bypass CKT YG11M open.
   - Faulty ignition module connection or module.
5. Confirms that Code 42 is a faulty ECM and not an intermittent in CKT's.

Diagnostic Aids:

An intermittent may be caused by a poor connection, rubbed through wire insulation, or a wire broken inside the insulation.

Inspect harness connectors for backed out terminals, improper mating, broken locks, improperly formed or damaged terminals, poor terminal to wire connection, and damaged harness.

"NON-SCAN" DIAGNOSTICS

CODE 42

ELECTRONIC SPARK TIMING (EST) CIRCUIT 1.6L TURBO LOTUS ELAN

1
- CLEAR CODES.
- IDLE ENGINE FOR 1 MINUTE OR UNTIL CODE 42 SETS. DOES CODE 42 SET?

YES → **2**

NO → CODE 42 INTERMITTENT. REFER TO DIAGNOSTIC AIDS ON FACING PAGE.

2
- IGNITION "OFF".
- DISCONNECT ECM CONNECTORS.
- IGNITION "ON".
- OHMMETER SELECTOR SWITCH IN THE 1000 TO 2000 OHMS RANGE.
- PROBE ECM HARNESS CONNECTOR TERMINAL D4 (CKT Y11J) WITH AN OHMMETER TO GROUND. IT SHOULD READ LESS THAN 500 OHMS. DOES IT?

YES → **3**

NO → OPEN CKT Y11J, FAULTY CONNECTION OR FAULTY IGNITION MODULE.

3
- PROBE ECM HARNESS CONNECTOR TERMINAL D5 CKT YG11M WITH A TEST LIGHT TO 12 VOLTS AND NOTE LIGHT.

LIGHT "OFF" → **4**

LIGHT "ON" → DISCONNECT IGNITION MODULE 4-WAY CONNECTOR

- LIGHT "ON" → CKT YG11M SHORTED TO GROUND.
- LIGHT "OFF" → FAULTY IGNITION MODULE.

4
- WITH OHMMETER STILL CONNECTED TO ECM HARNESS CKT Y11J (D4) AND GROUND PROBE ECM HARNESS CKT YG11M (D5) WITH THE TEST LIGHT CONNECTED TO 12 VOLTS. AS TEST LIGHT CONTACTS CKT YG11M, RESISTANCE SHOULD SWITCH FROM UNDER 500 TO OVER 5,000 OHMS. DOES IT?

NO → **5**

YES → **5**

5
- DISCONNECT DI MODULE 6 PIN CONNECTOR.
- CHECK IF CKT YG11M IS OPEN OR CKT Y11J IS GROUNDED. ARE CKT'S OK?

YES → CHECK FOR POOR CONNECTION AT IGNITION MODULE TERMINAL "D". IF OK IGNITION MODULE IS FAULTY.

NO → REPAIR CKT

6
- RECONNECT ECM AND IDLE ENGINE FOR ONE MINUTE OR UNTIL CODE 42 SETS. DOES CODE SET?

YES → FAULTY ECM

NO → CODE 42 INTERMITTENT. REFER TO DIAGNOSTIC AIDS ON FACING PAGE.

CLEAR CODES AND CONFIRM NO "CHECK ENGINE" LIGHT.

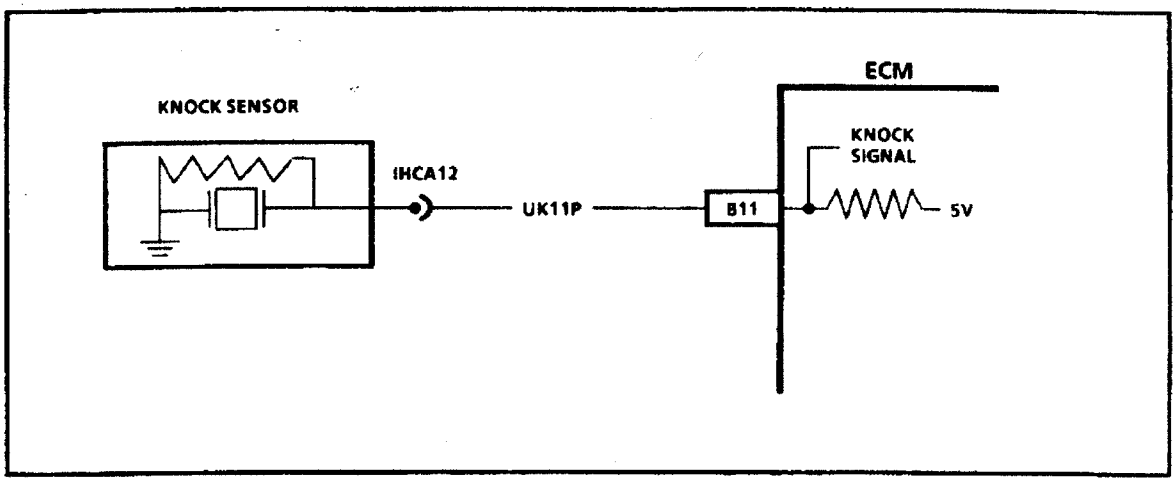

CODE 43

ELECTRONIC SPARK CONTROL (ESC) CIRCUIT 1.6L TURBO LOTUS ELAN

Circuit Description:

The knock sensor detects engine detonation and the ECM retards the electronic spark timing based on the signal being received. The circuitry within the knock sensor causes the ECM 5 volts to be pulled down so that, under a no knock condition, CKT UK11P would measure about 2.5 volts. The knock sensor produces an AC signal which rides on the 2.5 volts DC voltage. The amplitude and signal frequency are dependent upon the knock level.

The ECM performs two tests on this circuit to determine if it is operating correctly. If either of the tests fail, a Code 43 will be set.

- If there is an indication of knock for 3.67 seconds over a 3.9 second interval with the engine running.
- If ECM terminal "B11" voltage is either above about 3.75 volts (indicating open CKT UK11P), or below about 1.25 volts (indicating CKT UK11P is shorted to ground) for 5 seconds or more.

Test Description:

Numbers below refer to circled numbers on the diagnostic chart.

1. If the conditions for the test, as described above, are being met, the the check engine light will be turned "ON" again and Code 41 stored. The Tech 1 could indicate "YES" when the knock signal position is selected as well. If an audible knock is heard from the engine, repair the internal engine problem, because normally, no knock should be detected at idle.
2. Tapping on the oil filter base casting should produce a knock signal. **Don't hit sensor or oil filter.**
3. The ECM has a 5 volts signal through a pull-up resistor which should be present at the injector harness terminal IHCA12.
4. This test determines if the knock sensor or the ECM is faulty.

Diagnostic Aids:

If Code 43 is intermittent:

- Refer to "Intermittents" in Section EMK. 6.
- Mechanical engine knock can cause a knock sensor signal. Abnormal engine noise must be corrected before using this chart.

"NON-SCAN" DIAGNOSTICS

CODE 43

ELECTRONIC SPARK CONTROL (ESC) CIRCUIT 1.6L TURBO LOTUS ELAN

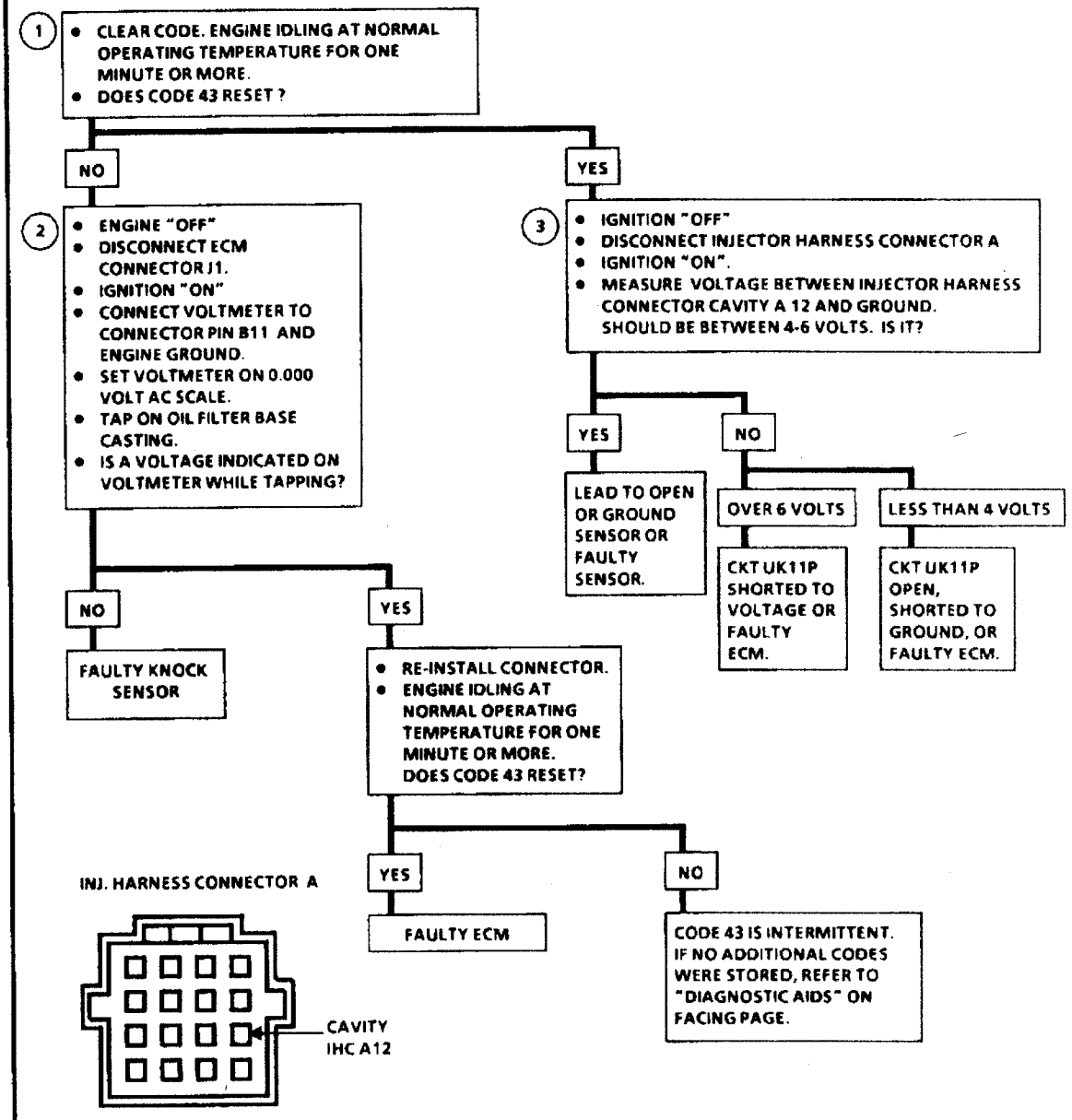

CLEAR CODES AND CONFIRM NO "CHECK ENGINE LIGHT".

CODE 51

PROM ERROR (FAULTY ECM) 1.6L TURBO LOTUS ELAN

THE ECM OF THE 1.6L TURBO LOTUS ELAN IS A SEALED UNIT, AND NO ACCESS TO THE MEM-CAL IS POSSIBLE. IF CODE 51 IS DISPLAYED, THE COMPLETE ECM MUST BE REPLACED.

CLEAR CODES AND CONFIRM NO "CHECK ENGINE" LIGHT.

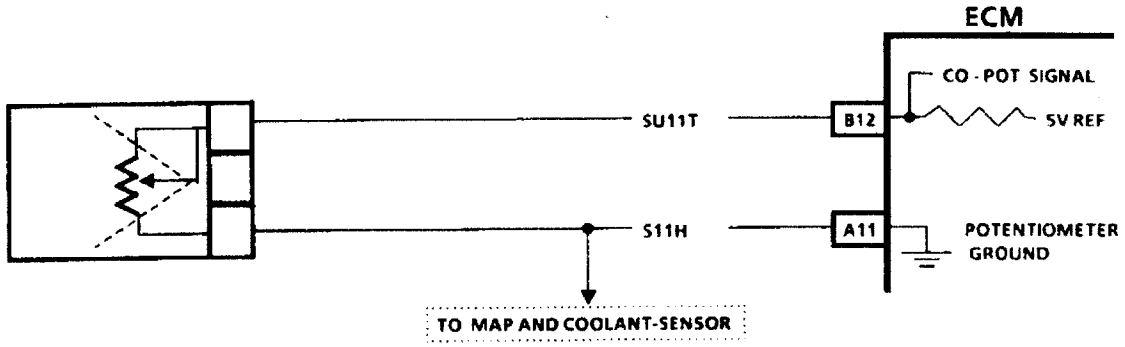

CODE 54

(PAGE 1 OF 2)

CO - POTENTIOMETER CIRCUIT (SIGNAL VOLTAGE HIGH OR LOW) 1.6L TURBO LOTUS ELAN

Circuit Description:

The CO - Potentiometer provides a constant voltage signal from 0.6 volts to about 4.2 volts. Depending on the signal voltage the ECM will decrease or increase injection pulse width in order to obtain the CO emission percentage required. See EMK.3-E for CO emission check and reset.

Test Description:

Numbers below refer to circled numbers on the diagnostic chart.

1. This step checks to see if Code 54 is the result of a hard failure or an intermittent condition.
   A Code 54 will set if:
   CO - Potentiometer output voltage is either below 0.3 volt or above 4.7 volts
2. This test determines if either the potentiometer is faulty or other CKT components.

Diagnostic Aids:

A Code 54 will result if CKT SU11T or S11H are open or SU11T is shorted to ground.

If Code 54 is intermittent:

- Reset CO emission (see EMK. 3-E).
- Check for injector leaking and incorrect fuel pressure.

"NON-SCAN" DIAGNOSTICS

CODE 54

(Page 1 of 2)

CO-POTENTIOMETER CIRCUIT (SIGNAL VOLTAGE LOW OR HIGH) 1.6L TURBO LOTUS ELAN

1
- IGNITION "OFF", CLEAR CODES.
- DIAGNOSTIC TERMINAL NOT GROUNDED.
- START WARM ENGINE AND RUN FOR 1 MINUTE OR LONGER OR UNTIL "CHECK ENGINE LIGHT" COMES ON.
- IGNITION "ON", ENGINE STOPPED. GROUND DIAGNOSTIC TERMINAL AND NOTE CODE.

CODE 54 → 2

NO CODE 54 → CODE 54 IS INTERMITTENT. IF NO ADDITIONAL CODES WERE STORED, REFER TO "DIAGNOSTIC AIDS" ON FACING PAGE.

2
- DISCONNECT CO-POTENTIOMETER AND CHECK VOLTAGE AT HARNESS CONNECTOR, BETWEEN CKT SU11T AND S11H.
- VOLTAGE SHOULD BE APPROXIMATELY 5 VOLTS. IS IT?

YES →
- REPLACE CO-POTENTIOMETER BY A KNOWN GOOD PART.
- START WARM ENGINE AND RUN FOR AT LEAST 1 MINUTE OR UNTIL "CHECK ENGINE LIGHT" COMES ON. STILL CODE 54?

YES → FAULTY ECM CONNECTION OR ECM

NO → FAULTY CO-POTENTIOMETER

NO → SEE CODE 54 (2 OF 2)

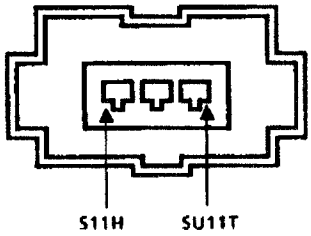

CLEAR CODES AND CONFIRM NO "CHECK ENGINE LIGHT".

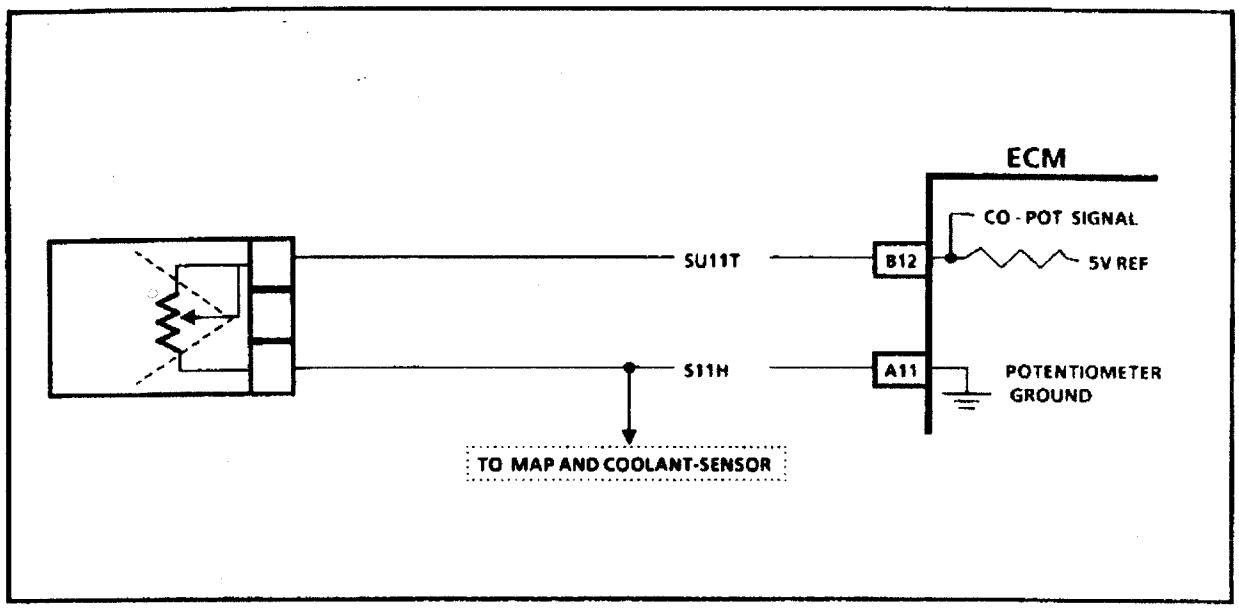

CODE 54

(PAGE 2 OF 2)

CO - POTENTIOMETER CIRCUIT
(SIGNAL VOLTAGE HIGH OR LOW)
1.6L TURBO LOTUS ELAN

Circuit Description:

The CO - Potentiometer provides a constant voltage signal from 0.6 volts to about 4.2 volts. Depending on the signal voltage the ECM will decrease or increase injection pulse width in order to obtain the CO emission percentage required. See EMK.3-E for CO emission check and reset.

Test Description:

Numbers below refer to circled numbers on the diagnostic chart.

4. This test determines if the problem is a faulty signal circuit or ground.

Diagnostic Aids:

A Code 54 will result if CKT SU11T or S11H are open or SU11T is shorted to ground.

If Code 54 is intermittent:

- Reset CO emission (see EMK. 3-E).
- Check for injector leaking and incorrect fuel pressure.

"NON-SCAN" DIAGNOSTICS

CODE 54

(Page 2 of 2)

CO-POTENTIOMETER CIRCUIT (SIGNAL VOLTAGE LOW OR HIGH) 1.6L TURBO LOTUS ELAN

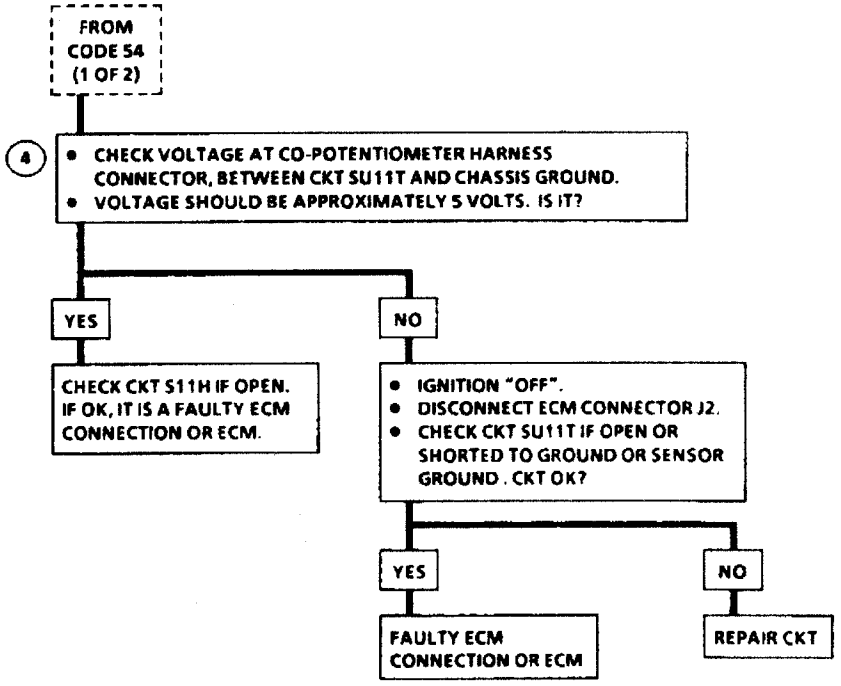

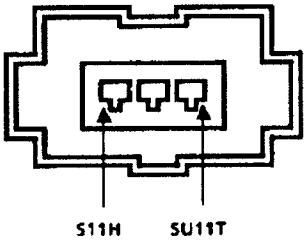

CLEAR CODES AND CONFIRM NO "CHECK ENGINE LIGHT".

SECTION EMK.6

FAULT DIAGNOSIS WITH INTERMITTENT OR NO TROUBLE CODES

TABLE OF CONTENTS

Performing Symptom Diagnosis ..... Page EMK.6- 1
Intermittents ..... Page EMK.6- 2
Hard Start ..... Page EMK.6- 2
Rough, Unstable, or Incorrect Idle, Stalling ..... Page EMK.6- 3
Poor Gas Mileage ..... Page EMK.6- 4
Detonation/Spark Knock ..... Page EMK.6- 5
Lack of Power, Sluggish, or Spongy ..... Page EMK.6- 6
Surges and/or Chuggle ..... Page EMK.6- 7
Cuts Out, Misses ..... Page EMK.6- 8
Hesitation, Sag, Stumble ..... Page EMK.6- 8
Excessive Exhaust Emissions ..... Page EMK.6- 9
Dieseling, Run-On ..... Page EMK.6-10
Backfire ..... Page EMK.6-10

PERFORMING SYMPTOM DIAGNOSIS

The DIAGNOSTIC CIRCUIT CHECK should be performed before using this section. The purpose of this section is to locate the source of a driveability or emissions problem when other diagnostic procedures cannot be used. This may be because of difficulties in locating a suspected sub-system or component.

Many driveability related problems can be eliminated by following the procedures found in Service Bulletins. These bulletins supersede this manual. Be sure to check all bulletins related to the complaint or suspected system.

The sequence of the checks listed in this section is not intended to be followed as on a step-by-step procedure. The checks are listed such that the less difficult and time consuming operations are performed before more difficult ones.

Most of the symptom procedures call for a careful visual and physical check. ***The importance of this step cannot be stressed too strongly.*** **It can lead to correcting a problem without further checks, and can save valuable time.** This procedure includes checking the following.

- Vacuum hoses for splits, kinks, and proper connections.
- Throttle body and intake manifold for leaks
- Ignition wires for cracking, hardness, proper routing, and carbon tracking
- Wiring for proper connections, pinches, and cuts

INTERMITTENTS

Definition: Problem may or may not activate the "Check Engine Light" or store a trouble code.

DO NOT use the trouble code charts in Section EMK.4 for intermittent problems other than a guide to the circuitry probably causing the problem. The fault must be present to locate the problem. If a fault is not present, the use of trouble code charts may result in the replacement of good parts.

- Most intermittent problems are caused by faulty electrical connections or wiring. Perform careful checks of suspected circuits for
  - Poor mating of the connector halves and terminals not fully seated in the connector body (backed out)
  - Improperly formed or damaged terminals. All connector terminals in problem circuit should be carefully reformed to increase contact tension.
  - Poor terminal to wire connection. This requires removing the terminal from the connector body to check as outlined in the introduction to Section EMK.1 - L.
  - Check (wiggle) suspected circuit wiring and connectors while watching TECH 1 data on display. See figure EMK.4-9 TECH 1 DATA for typical data values at idle speed.
- If a visual and physical check does not locate the cause of the problem, the car can be driven with a voltmeter connected to a suspected circuit or a Tech 1 tool may be used performing a test called "Snapshot". See Tech 1 manual and EMK.1-G for further explanation. An abnormal voltage reading while the problem occurs indicates that the problem may be in that circuit.
- Check for loss of trouble code memory. To check, disconnect the TPS and allow the engine to idle until the "CheckEngine Light" (CEL) turns "ON." Code 22 should be stored and kept in memory when the ignition is turned "OFF" for at least 10 seconds. If not, the ECM is faulty.
- An intermittent CEL and no trouble codes may be caused by
  - Electrical system interference caused by a defective relay, ECM driven solenoid, or switch. They can cause a sharp electrical surge. Normally, the problem will occur when the faulty component is operated.
  - Improper installation of electrical options, such as lights, 2-way radios, etc.
  - EST and Reference Signal Input wires which should be routed away from spark plug wires, ignition system components, and generator. Ground wire from ECM to ignition system which may be faulty.
  - Ignition secondary wire shorted to ground.
  - "Check Engine Light" and diagnostic test terminal circuits intermittently shorted to ground.
  - Faulty ECM.

HARD START

Definition: Engine cranks well but does not start for a long time. Engine does eventually start, but may or may not continue to run.

Perform careful visual and physical check as described at the beginning of Section EMK.6.

Perform "Diagnostic Circuit Check".

- **CHECK**
  - For possibility of misfiring, crossfiring, or cutting under load or at idle. Locate misfiring cylinder(s) by performing the following test.
    1. Start engine. Disconnect idle air control valve. Remove one spark plug wire from a spark plug and ground it against the engine.
    2. Note drop in engine speed.
    3. Repeat for all four cylinders.
    4. Stop engine and reconnect idle air control valve.

If the engine speed dropped equally (within 50 rpm) on all cylinders, refer to "Rough, Unstable, or Incorrect Idle, Stalling" symptom.

If there was no drop or excessive variation in engine speed on one or more cylinders, check for spark on the respective cylinder(s) with spark tester T000T0901. If spark is present, remove the spark plugs from the cylinder(s) and check for the following.

- Cracks
- Burned electrode
- Wear
- Heavy deposits
- Improper gap

- Fuel for poor quality, "stale" fuel, and water contamination.
- Ignition wires for shorts or faulty insulation.
- Ignition coil connections.
- Fuel pump relay. Connect test light between fuel pump relay base terminal WLG10Y and battery voltage. Light should be "ON" for 2 seconds following ignition "ON."
- Secondary ignition voltage output with spark tester T000T0901.
- Spark plugs. Look for wetness, cracks, improper gap, burned electrodes, and heavy deposits. Visually inspect ignition system for moisture, dust, cracks, burns, etc.
- For faulty ECM and ignition grounds.
- Spray plug wires with fine water mist to check for shorts.
- Idle Air Control system. Use EMK.4-9 chart.
- Fuel system for restricted filter or improper pressure. Use EMK.4-7 chart.
- Injectors for leakage.
- Coolant sensor for a shift in calibration. Use Code 14 or Code 15 chart.
- TPS for sticking or binding. TPS voltage should read 0.40 ± 0.02 volt on the Tech 1 or measured with a digital voltmeter.
- Injector balance by performing injector balance test (see EMK.3-K).
- In-tank fuel pump check valve. A faulty valve would allow the fuel in the lines to drain back to the tank after the engine is stopped.
- Engine valve timing and compression.

ROUGH, UNSTABLE, OR INCORRECT IDLE, STALLING

Definition: The engine runs unevenly at idle. If severe, the car may shake. Also, the idle speed may vary (called "hunting"). Either condition may be severe enough to cause stalling. Engine idles at incorrect speed.

Perform careful visual and physical check as described at the beginning of Section EMK.6.

Perform "Diagnostic Circuit Check".

- **CHECK**
  - For possibility of misfiring, crossfiring, or cutting under load or at idle. Locate misfiring cylinder(s) by performing the following test.
    1. Start engine. Disconnect idle air control valve. Remove one spark plug wire from a spark plug and ground it against the engine.
    2. Note drop in engine speed.
    3. Repeat for all four cylinders.
    4. Stop engine and reconnect idle air control valve.

If the engine speed dropped equally (within 50 rpm) on all cylinders, proceed through the causes listed. If there was no drop or excessive variation in engine speed on one or more cylinders, check for spark on the respective cylinder(s) with spark tester T000T0901. If spark is present, remove the spark plugs from the cylinder(s) and check for the following.

- Cracks
- Burned electrode
- Wear
- Heavy deposits
- Improper gap

- Throttle for sticking shaft or binding linkage. This will cause a high TPS voltage (open throttle indication) and the ECM will not control idle. TPS voltage should be about 0.40 ± 0.02 volt with throttle closed.
- Ignition wires for shorts or faulty insulation
- Ignition system for moisture, dust, cracks, burns, etc. Spray plug wires with fine water mist to check for shorts.
- Secondary ignition voltage output with T000T0901 spark tester.
- ECM and ignition system for faulty grounds
- Proper operation of EST.
- Spark plugs. Look for wetness, cracks, improper gap, burned electrodes, and heavy deposits.
- Fuel system for restricted filter or improper pressure. Use EMK.4-7 chart.
- Injectors for leakage.
- For vacuum leaks at intake manifold gasket
- Idle Air Control system. Use EMK.4-9 chart.

- Injectors for leakage.
- For vacuum leaks at intake manifold gasket
- Idle Air Control system. Use EMK.4-9 chart.
- Electrical system voltage. IAC valve will not move if voltage is below 9 volts or greater than 17.8 volts. Also check battery cables and ground straps for poor contact. Erratic voltage will cause the IAC valve to change its position, resulting in poor idle quality.
- MAP sensor output. Check sensor by comparing it to the output on a similar vehicle if possible.
- Incorrect CO-setting. Check and reset according to CHART EMK. 3-E.
- Coolant sensor for a shift in calibration. Use Code 14 or Code 15 chart.
- A/C refrigerant pressure for high pressure. Check for overcharging.
- Generator output voltage. Repair if less than 9 volts or more than 17.1 volts.
- Engine valve timing and compression.
- For worn or incorrect basic engine parts such as cam, heads, pistons, etc. Also check for broken or weak valve springs.
- Injector balance by performing injector balance test (see EMK.3-K).
- For overheating and possible causes. Look for the following:
  * Restricted air flow to radiator, or restricted water flow through radiator.
  * Faulty or incorrect thermostat.
  * Inoperative electric radiator fan circuit.

POOR GAS MILEAGE

Definition: Gas mileage, as measured by an actual road test, is noticeably lower than expected. Gas mileage is noticeably lower than it was during a previous actual road test.

Perform careful visual and physical check as described at the beginning of Section EMK.6.

Perform "Diagnostic Circuit Check".

- **CHECK**
  - For possibility of misfiring, crossfiring, or cutting under load or at idle. Locate misfiring cylinder(s) by performing the following test.
    1. Start engine. Disconnect idle air control valve. Remove one spark plug wire from a spark plug and ground it against the engine.
    2. Note drop in engine speed.
    3. Repeat for all four cylinders.
    4. Stop engine and reconnect idle air control valve.

  If the engine speed dropped equally (within 50 rpm) on all cylinders, refer to "Rough, Unstable, or Incorrect Idle, Stalling" symptom. If there was no drop or excessive variation in engine speed on one or more cylinders, check for spark on the respective cylinder(s) with spark tester T000T0901. If spark is present, remove the spark plugs from the cylinder(s) and check for the following.

  - Cracks
  - Burned electrode
  - Wear
  - Heavy deposits
  - Improper gap

  - Proper operation of EST.
  - Spark plugs. Look for wetness, cracks, improper gap, burned electrodes, and heavy deposits.
  - Spark plugs for correct heat range.
  - Fuel for poor quality, "stale" fuel, and water contamination.
  - Fuel system for restricted filter or improper pressure. Use EMK.4-7 chart.
  - Injectors for leakage.
  - For vacuum leaks at intake manifold gasket.
  - Air cleaner element (filter) for dirt or plugging.
  - Idle Air Control system. Use EMK.4-9 chart.
  - Throttle shaft or TPS for sticking or binding. TPS voltage should read about 0.40 ± 0.02 volt on a Tech 1 with the throttle closed.
  - MAP sensor output. Check sensor by comparing it to the output on a similar vehicle if possible.
  - Coolant sensor for a shift in calibration. Use Code 14 or Code 15 chart.
  - Vehicle speed sensor (VSS) input with Tech 1 to make sure reading of VSS matches that of vehicle speedometer.

- A/C relay operation. A/C should cut out at wide open throttle.
- A/C refrigerant pressure for high pressure. Check for overcharging .
- Injector balance by performing injector balance test.
- Generator output voltage. Repair if less than 9 volts or more than 17.1 volts.
- Radiator fan operation.
- Thermostat for incorrect heat range or being inoperative.
- Engine valve timing and compression.
- For worn or incorrect basic engine parts such as cam, heads, pistons, etc.

- Check driver's driving habits and vehicle conditions which affect gas mileage.
  - Is A/C "ON" full time ?
  - Are tyres at correct pressure?
  - Are excessively heavy loads being carried?
  - Is acceleration often heavy?
  - Are the wheels aligned correctly?
  - Are the vehicle brakes dragging?
  - Is the brake switch applying excessive force on the brake pedal?
- Incorrect CO-setting. Check and reset according to EMK. 3-E

DETONATION/SPARK KNOCK

Definition: A mild to severe ping, usually worse under acceleration. The engine makes sharp metallic knocks that change with throttle opening.

Perform careful visual and physical check as described at the beginning of Section EMK.6.

Perform "Diagnostic Circuit Check".

- **CHECK**
  - For possibility of misfiring, crossfiring, or cutting under load or at idle. Locate misfiring cylinder(s) by performing the following test.
    1. Start engine. Disconnect idle air control valve. Remove one spark plug wire from a spark plug and ground it against the engine.
    2. Note drop in engine speed.
    3. Repeat for all four cylinders.
    4. Stop engine and reconnect idle air control valve.

If the engine speed dropped equally (within 50 rpm) on all cylinders, refer to "Rough, Unstable, or Incorrect Idle, Stalling" symptom. If there was no drop or excessive variation in engine speed on one or more cylinders, check for spark on the respective cylinder(s) with spark tester T000T0901. If spark is present, remove the spark plugs from the cylinder(s) and check for the following.

- Cracks
- Wear
- Improper gap
- Burned electrode
- Heavy deposits

  - For turbocharger wastegate mechanical or control circuit problem.
  - Ignition wires for shorts or faulty insulation.
  - Spark plugs for correct heat range
  - Fuel for poor quality, "stale" fuel, and water contamination
  - Fuel system for restricted filter or improper pressure.
  - For excessive oil entering combustion chamber. Oil will reduce the effective octane of fuel.
  - For vacuum leaks at intake manifold gasket
  - MAP sensor output. Check sensor by comparing it to the output on a similar vehicle, if possible.
  - Coolant sensor for a shift in calibration.
  - Vehicle brakes for dragging.
  - For overheating and possible causes. Look for the following.
  - Low or incorrect coolant solution.
  - Loose water pump belt.
  - Restricted air flow to radiator or restricted water flow through radiator.
  - Faulty or incorrect thermostat.
  - Inoperative electric cooling fan circuit.
  - Engine valve timing and compression.
  - For worn or incorrect basic engine parts such as cam, heads, pistons, etc.
- Remove internal engine carbon with top engine cleaner.
- Knock sensor or circuitry fault use Code 43 chart to check

LACK OF POWER, SLUGGISH, OR SPONGY

Definition: Engine delivers less than expected power. There is little or no increase in speed when the accelerator pedal is depressed partially.

Perform careful visual and physical check as described at the beginning of Section EMK.6.

Perform "Diagnostic Circuit Check".

- **CHECK**
  - For possibility of misfiring, crossfiring, or cutting under load or at idle. Locate misfiring cylinder(s) by performing the following test.
    1. Start engine. Disconnect idle air control valve. Remove one spark plug wire from a spark plug and ground it against the engine.
    2. Note drop in engine speed.
    3. Repeat for all four cylinders.
    4. Stop engine and reconnect idle air control valve.

  If the engine speed dropped equally (within 50 rpm) on all cylinders, refer to "Rough, Unstable, or Incorrect Idle, Stalling" symptom. If there was no drop or excessive variation in engine speed on one or more cylinders, check for spark on the respective cylinder(s) with spark tester T000T0901. If spark is present, remove the spark plugs from the cylinder(s) and check for the following:

    - Cracks
    - Wear
    - Improper gap
    - Burned electrode
    - Heavy deposits

  - Ignition wires for shorts or faulty insulation.
  - Ignition system for moisture, dust, cracks, burns, etc. Spray plug wires with fine water mist to check for shorts.
  - Secondary ignition voltage output with T000T0901 tester.
  - Ignition coil connections.
  - ECM and ignition system for faulty grounds.
  - Proper operation of EST.
  - Spark plugs. Look for wetness, cracks, improper gap, burned electrodes, and heavy deposits.
  - Turbocharger wastegate electrical or mechanical problem.
  - Spark plugs for correct heat range.
  - Fuel for poor quality, "stale" fuel, and water contamination
  - Fuel system for restricted filter or improper pressure. Use CHART EMK.4 - 7.
  - Mixture lean, Check for incorrect C-setting (see EMK.3-E).
  - For vacuum leaks at intake manifold gasket.
  - Air cleaner element (filter) for dirt or plugging.
  - Throttle shaft or TPS for sticking or binding. TPS voltage should read about 0.40 ± 0.02 volts on Tech 1 with the throttle closed, about 4.0 volts and more than 95% throttle travel at WOT.
  - MAP sensor output. Check sensor by comparing it to the output on a similar vehicle if possible.
  - Check MAP sensor vacuum hose to be free of liquid and dirt.
  - Coolant sensor for a shift in calibration. Use Code 14 or Code 15 chart.
  - Vehicle speed sensor (VSS) input with Tech 1 to make sure reading of VSS matches that of vehicle speedometer.
  - Engine for improper or worn camshaft.
  - A/C relay operation. A/C should cut out at wide open throttle.
  - A/C refrigerant pressure for high pressure. Check for overcharging.
  - Generator output voltage. Repair if less than 9 volts or more than 17.1 volts.
  - Radiator fan operation.
  - Vehicle brakes for dragging
  - Engine valve timing and compression.
  - For worn or incorrect basic engine parts such as cam, heads, pistons, etc.
  - Inoperative Secondary Throttle Valve Control. Check according to EMK.3-L.
  - For overheating and possible causes. Look for the following:
    - Low or incorrect coolant solution.
    - Loose water pump belt.
    - Restricted air flow to radiator, or restricted water flow through radiator.
    - Faulty or incorrect thermostat.
    - Inoperative electric cooling fan circuit.

SURGES AND/OR CHUGGLE

Definition: Engine power variation under steady throttle or cruise. Feels like the car speeds up and slows down with no change in the accelerator pedal.

Perform careful visual and physical check as described at the beginning of Section EMK.6.

Perform "Diagnostic Circuit Check".

- **CHECK**
  - For possibility of misfiring, crossfiring, or cutting under load or at idle. Locate misfiring cylinder(s) by performing the following test.
    1. Start engine. Disconnect idle air control valve. Remove one spark plug wire from a spark plug and ground it against the engine.
    2. Note drop in engine speed.
    3. Repeat for all four cylinders.
    4. Stop engine and reconnect idle air control valve.

  If the engine speed dropped equally (within 50 rpm) on all cylinders, refer to "Rough, Unstable, or Incorrect Idle, Stalling" symptom. If there was no drop or excessive variation in engine speed on one or more cylinders, check for spark on the respective cylinder(s) with spark tester T000T0901. If there is no spark, see chart EMK.4-3" If spark is present, remove the spark plugs from the cylinder(s) and check for the following:
    - Cracks
    - Burned electrode
    - Wear
    - Heavy deposits
    - Improper gap
  - Ignition wires for shorts or faulty insulation.
  - Ignition system for moisture, dust, cracks, burns, etc. Spray plug wires with fine water mist to check for shorts.
  - Secondary ignition voltage output with T000T0901 tester.
  - ECM and ignition system for faulty grounds.
  - Proper operation of EST.
  - Spark plugs. Look for wetness, cracks, improper gap, burned electrodes, and heavy deposits.
  - Spark plugs for correct heat range.
  - Fuel for poor quality, "stale" fuel, and water contamination.
  - Fuel system for restricted filter or improper pressure.
  - Injectors for leakage (see chart EMK.4-7 and EMK.3-K).
  - Injector balance by performing injector balance test (see EMK.3-K).
  - For vacuum leaks at intake manifold gasket.
  - Idle Air Control system faulty. Use EMK.4-9 chart.
  - Electrical system voltage. IAC valve will not move if voltage is below 9 volts or greater than 17.8 volts. Also check battery cables and ground straps for poor contact.
    Erratic voltage will cause the IAC valve to change its position, resulting in poor idle quality.
  - Throttle shaft or TPS for sticking or binding. TPS voltage should read about 0.40 ± 0.02 volt on Tech 1 with the throttle closed.
  - MAP sensor output. Check sensor by comparing it to the output on a similar vehicle, if possible.
  - Check MAP sensor vacuum hose for free of liquid and dirt.
  - Coolant sensor for a shift in calibration. Use Code 14 or Code 15 chart.
  - Vehicle speed sensor (VSS) input with Tech 1 to make sure reading of VSS matches that of vehicle speedometer.
  - A/C relay operation. A/C should cut out at wide open throttle.
  - Incorrect CO-setting. Check and reset according to EMK.3-E

CUTS OUT, MISSES

Definition: Steady pulsation or jerking that follows engine speed, usually more pronounced as engine load increases. The exhaust has a steady spitting sound at idle or low speed.

Perform careful visual and physical check as described at the beginning of Section EMK.6.
Perform "Diagnostic Circuit Check".

- **CHECK**
  - Ignition wires for shorts or faulty insulation.
  - Ignition system for moisture, dust, cracks, burns, etc. Spray plug wires with fine water mist to check for shorts.
  - Secondary ignition voltage output with tester T000T0901.
  - Ignition coil connections.
  - ECM and ignition system for faulty grounds.
  - Proper operation of EST.
  - Spark plugs. Look for wetness, cracks, improper gap, burned electrodes, and heavy deposits.
  - Spark plugs for correct heat range.
  - Fuel for poor quality, "stale" fuel, and water contamination.
  - Fuel system for restricted filter or improper pressure.
  - Throttle shaft or TPS for sticking or binding. TPS voltage should read about 0.40 ± 0.02 volts on Tech 1 or DVM with the throttle closed.
  - Injector balance by performing injector balance test (see EMK.3-K).
  - For possibility of misfiring, crossfiring, or cutting under load or at idle. Locate misfiring cylinder(s) by performing the following test.
    1. Start engine. Disconnect idle air control valve. Remove one spark plug wire from a spark plug and ground it against the engine.
    2. Note drop in engine speed.
    3. Repeat for all four cylinders.
    4. Stop engine and reconnect idle air control valve.

If the engine speed dropped equally (within 50 rpm) on all cylinders, refer to "Rough, Unstable, or Incorrect Idle, Stalling" symptom. If there was no drop or excessive variation in engine speed on one or more cylinders, check for spark on the respective cylinder(s) with spark tester T000T0901. If spark is present, remove the spark plugs from the cylinder(s) and check for the following:

- Cracks
- Burned electrode
- Wear
- Heavy deposits
- Improper gap

HESITATION, SAG, STUMBLE

Definition: Momentary lack of response as the accelerator is pushed down. Can occur at all vehicle speeds. Usually most severe when first trying to make the car move, as from a stop sign. May cause the engine to stall if severe enough.

Perform careful visual and physical check as described at the beginning of Section EMK.6.
Perform "Diagnostic Circuit Check".

- **CHECK**
  - For possibility of misfiring, crossfiring, or cutting under load or at idle. Locate misfiring cylinder(s) by performing the following test.
    1. Start engine. Disconnect idle air control valve. Remove one spark plug wire from a spark plug and ground it against the engine.
    2. Note drop in engine speed.
    3. Repeat for all four cylinders.
    4. Stop engine and reconnect idle air control valve.

If the engine speed dropped equally (within 50 rpm) on all cylinders, refer to "Rough, Unstable, or Incorrect Idle, Stalling" symptom. If there was no drop or excessive variation in engine speed on one or more cylinders, check for spark on the respective cylinder(s) with spark tester T000T0901. If spark is present, remove the spark plugs from the cylinder(s) and check for the following:

- Cracks
- Burned electrode
- Wear
- Heavy deposits
- Improper gap

  - Ignition wires for shorts or faulty insulation.
  - Ignition system for moisture, dust, cracks, burns, etc. Spray plug wires with fine water mist to check for shorts.

- Secondary ignition voltage output with T000T0901 tester.
- ECM and ignition system for faulty grounds
- Proper operation of EST.
- Spark plugs. Look for wetness, cracks, improper gap, burned electrodes, and heavy deposits.
- Spark plugs for correct heat range
- Fuel for poor quality, "stale" fuel, and water contamination.
- Fuel system for restricted filter or improper pressure. Use EMK. 4-7 chart.
- For vacuum leaks at intake manifold gasket.
- Air cleaner element (filter) for dirt or plugging.
- Idle Air Control system. Use EMK.4-9 chart.
- Check electrical system voltage. IAC valve will not move if voltage is below 9 volts or greater than 17.8 volts. Also check battery cables and ground straps for poor contact. Erratic voltage will cause the IAC valve to change its position, resulting in poor idle quality.
- Throttle shaft or TPS for sticking or binding TPS voltage should read about 0.40 ± 0.02 volt on Tech 1 with the throttle closed.
- MAP sensor output. Check sensor by comparing it to the output on a similar vehicle, if possible.
- MAP sensor vacuum hose clogged.
- Coolant sensor for a shift in calibration. Use Code 14 or Code 15 chart.
- A/C relay operation. A/C should cut out at wide open throttle.
- Injector balance by performing injector balance test (EMK.3-K).
- A/C refrigerant pressure for high pressure. Check for overcharging.
- Generator output voltage. Repair if less than 9 volts or more than 17.1 volts.
- Vehicle brakes for dragging.
- Engine valve timing and compression.
- For worn or incorrect basic engine parts such as cam, heads, pistons,ect.
- For overheating and possible causes. Look for the following:
  * Low or incorrect coolant solution
  * Restricted air flow to radiator, or restricted water flow through radiator.
  * Faulty or incorrect thermostat.
  * Inoperative electric radiator fan circuit.
- Incorrect CO-setting. Check and reset according to EMK.3-E

EXCESSIVE EXHAUST EMISSIONS

Definition: Vehicle fails an emission test.

Perform careful visual and physical check as described at the beginning of Section EMK.6. Perform "Diagnostic Circuit Check".

- **CHECK**
  - Vacuum leaks.
  - Faulty coolant system and/or coolant fan operation.
  - Remove carbon with top engine cleaner. Follow instructions on can.
- Check CO-setting. See EMK. 3-E.
- If emission test indicates excessive HC and CO or exhaust has excessive odors, check for items which cause car to run RICH.
  - Incorrect fuel pressure. Use CHART EMK.4-7.
  - Crankcase breather valve plugging, sticking, or blocked breather hose. Check for fuel in crankcase.
  - Improper fuel cap installation.
  - Faulty spark plugs, plug wires, or ignition components.
  - Injector balance by performing injector balance test according to ECM.3-K.

DIESELING, RUN-ON

Definition: Engine continues to run after key is turned "OFF", but runs very roughly. (If engine runs smoothly, check ignition switch).

Perform careful visual and physical check as described at the beginning of Section EMK.6.
Perform "Diagnostic Circuit Check".

- **CHECK**
  Injectors for leakage.

BACKFIRE

Definition: Fuel ignites in intake manifold or in exhaust system, making a loud popping sound.

Perform careful visual and physical check as described at the beginning of Section EMK.6.
Perform "Diagnostic Circuit Check".

- **CHECK**
  - For possibility of misfiring, crossfiring, or cutting under load or at idle. Locate misfiring cylinder(s) by performing the following test.
    1. Start engine. Disconnect idle air control valve. Remove one spark plug wire from a spark plug and ground it against the engine.
    2. Note drop in engine speed.
    3. Repeat for all four cylinders.
    4. Stop engine and reconnect idle air control valve.

  If the engine speed dropped equally (within 50 rpm) on all cylinders, refer to "Rough, Unstable, or Incorrect Idle, Stalling" symptom. If there was no drop or excessive variation in engine speed on one or more cylinders, check for spark on the respective cylinder(s) with spark tester T000T0901. If spark is present, remove the spark plugs from the cylinder(s) and check for the following:

  - Cracks
  - Wear
  - Improper gap
  - Burned electrode
  - Heavy deposits
  - Intake manifold gasket for leaks.
  - Spark plugs. Look for wetness, cracks, improper gap, burned electrodes, and heavy deposits.
  - Ignition system for moisture, dust, cracks, burns, etc. Spray plug wires with fine water mist to check for shorts.
  - ECM and ignition system for faulty grounds
  - Secondary ignition voltage output with T000T0901 tester
  - For vacuum leaks at intake manifold gasket
  - Engine valve timing and compression.
  - For worn or incorrect basic engine parts such as cam, heads, pistons, etc.