SECTION WB.4
SUPPLEMENTAL INFLATABLE RESTRAINT (SIR) FAULT DIAGNOSIS

CAUTION: **To avoid deployment when troubleshooting the SIR system, use Digital Volt Ohm Meter (DVOM) T000T1034. DO NOT USE any type of electrical equipment other than those specified in this manual. Never use a non-powered probe type tester. Instructions in this manual must be followed carefully, otherwise personal injury may result.**

CONTENTS

DIAGNOSTIC PROCEDURES ..... Page 2
TROUBLE CODES ..... Page 2
TECH 1 TOOL DIAGNOSTICS ..... Page 2
COMPONENT LOCATION ..... Page 3
SIR DIAGNOSTIC SYSTEM CHECK ..... Page 4
CHART A-1 ..... Page 6
CHART A-2 ..... Page 8
CHART A-3 ..... Page 12
CHART C ..... Page 14
CHART D ..... Page 16
CHART E ..... Page 18
CHART F ..... Page 20
CODE 21 STEERING COLUMN RESISTANCE TOO HIGH ..... Page 22
CODE 21 AND 22 BOTH CURRENT STEERING COLUMN RESISTANCE TOO LOW ..... Page 26
CODE 22 STEERING COLUMN RESISTANCE TOO LOW ..... Page 28
CODE 23 STEERING COLUMN VOLTAGE TOO HIGH ..... Page 32
CODE 24 STEERING COLUMN VOLTAGE TOO LOW ..... Page 36
CODE 25 SHORT TO BATTERY IN STEERING COLUMN ..... Page 40
CODE 26 OPEN IN STEERING COLUMN ..... Page 42
CODE 31 OPEN 36VLR TO DEPLOYMENT LOOP ..... Page 44
CODE 32 GROUNDED 36VLR TO DEPLOYMENT LOOP ..... Page 46
CODE 33 STEERING DIODE SHORTED IN ARMING SENSOR ..... Page 48
CODE 34 OPEN IN IGNITION 1 FEED TO DEPLOYMENT LOOP ..... Page 50
CODE 35 DISCRIMINATING SENSOR OPEN ..... Page 56
CODE 41 ENERGY RESERVE VOLTAGE CHARGING FAILURE ..... Page 58
CODE 42 ENERGY RESERVE VOLTAGE TOO LOW ..... Page 60
CODE 51 ACCIDENT DETECTED ..... Page 62
CODE 52 EEPROM ACCIDENT DATA AREA FULL ..... Page 64
CODE 61 FORCE LOW OR S.I.R TELL TALE CIRCUIT FAILURE ..... Page 66
CODE 71 INTERNAL DERM FAULT ..... Page 68

Diagnostic Procedures

The diagnostic procedures used in this section are designed to aid in finding and repairing SIR problems. Outlined below are the steps to find and repair SIR problems quickly and effectively. **Not carefully following these procedures may result in extended diagnostic time, incorrect diagnosis and incorrect part replacements.**

1. PERFORM THE "SIR DIAGNOSTIC SYSTEM CHECK".
   The "SIR Diagnostic System Check" should always be the starting point of any SIR diagnostics. The "SIR Diagnostic System Check" checks for proper SIR tell tale lamp operation and checks for SIR trouble codes using a Tech 1 tool.
2. REFER TO THE PROPER DIAGNOSTIC CHART AS DIRECTED BY THE "SIR DIAGNOSTIC SYSTEM CHECK."
   The "SIR Diagnostic System Check" will lead you to the correct chart to diagnose any SIR problems. **Bypassing these procedures may result in extended diagnostic time, incorrect diagnosis and incorrect part replacements.**
3. REPEAT THE "SIR DIAGNOSTIC SYSTEM CHECK" AFTER ANY REPAIR OR DIAGNOSTIC PROCEDURES HAVE BEEN PERFORMED.
   Performing the "SIR Diagnostic System Check" after all repair or diagnostic procedures will assure that the repair has been made correctly and that no other conditions exist.

As a safety precaution the Inflator Module MUST be disconnected and the Inflator Module Replacement load T000T1035 connected during the diagnostic procedures. Refer to Section WB.1-G for instructions.

NOTE: If the TECH 1 indicates "Serial Data Fail" DO NOT press "ENTER" key although displayed, but follow this procedure instead:

- Press "EXIT" key
  "F2: FAULT CODES" should be displayed.
- Press "F2" key.
  Fault codes should be displayed.

Trouble Codes

The DERM maintains a history of all trouble codes that have been detected since the SIR codes were last cleared during service. The trouble codes are also stored according to class:

1) Current Codes - Faults that are presently being detected. Current codes are stored in RAM (Random Access Memory).
2) History Codes - All faults detected since the last time the EEPROM fault memory was cleared by a service technician. History codes are stored in EEPROM.

TECH 1 Tool Diagnostics

A TECH 1 tool can be used to read current and history codes and to clear all history codes after a repair is complete. The TECH 1 tool must be updated to communicate with the SIR system through cartridge T000T0898/3 before it can be used for SIR diagnostics. To use the TECH 1 tool, connect it to the ALDL connector and turn the ignition switch "ON." Follow the TECH 1 operators manual for communication with the SIR system. The TECH 1 tool reads serial data from the DERM "Data Link" output terminal "A9" to the ALDL connector terminal "G."

S.I.R. SYSTEM COMPONENT LOCATION

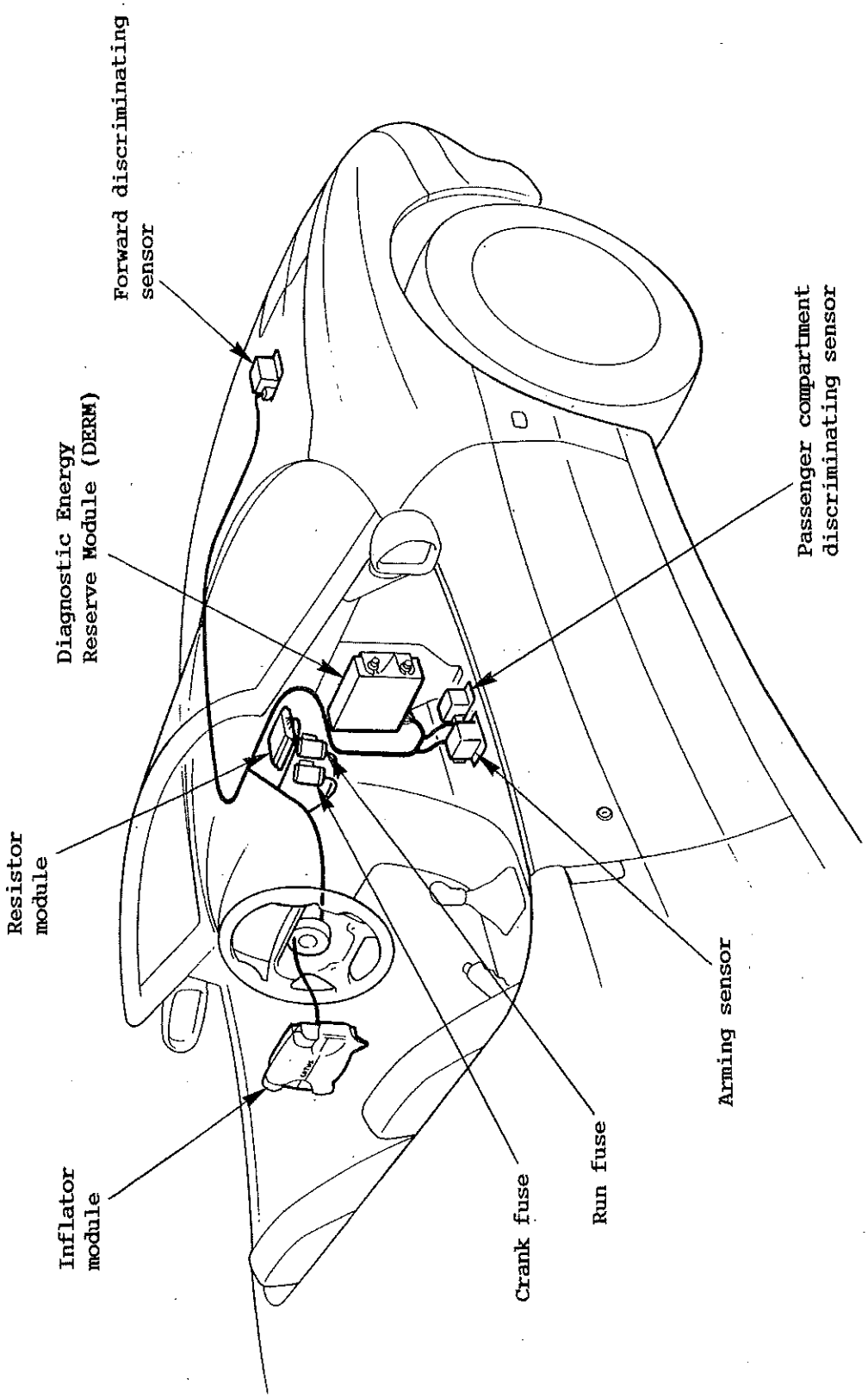

CAUTION: **To avoid deployment when troubleshooting the SIR system, use Digital Volt Ohm Meter (DVOM) T000T1034. DO NOT USE any type of electrical equipment other than those specified in this manual. Never use a non-powered probe type tester. Instructions in this manual must be followed carefully, otherwise personal injury may result.**

SIR DIAGNOSTIC SYSTEM CHECK

The diagnostic procedures used in this section are designed to find and repair SIR problems. To get the best results, it is important to utilize the diagnostic charts and follow the sequence listed below.

A. PERFORM THE "SIR DIAGNOSTIC SYSTEM CHECK".
The "SIR Diagnostic System Check" should be the starting point of any SIR diagnostics. The "SIR Diagnostic System Check" checks for proper operation of the SIR tell tale and checks for SIR trouble codes.

B. REFER TO THE PROPER DIAGNOSTIC CHART AS DIRECTED BY THE "SIR DIAGNOSTIC SYSTEM CHECK".
The "SIR Diagnostic System Check" will lead you to the correct chart to diagnose any SIR problems. Bypassing these procedures may result in extended diagnostic time.

C. REPEAT THE "SIR DIAGNOSTIC SYSTEM CHECK" AFTER ANY REPAIR OR DIAGNOSTIC PROCEDURES HAVE BEEN PERFORMED.
Performing the "SIR Diagnostic System Check" after all repair or diagnostic procedures will assure that the repair has been made correctly and that no other conditions exist.

Description:

When the Ignition Switch is first turned "ON" system voltage is applied through Ignition Fuse A18 to "SIR Indicator High" (B9) and to the SIR tell tale lamp which is connected to "SIR Indicator Low" (A1). The Run Fuse also applies system voltage to the "Ignition 1" inputs (A3 and B3). The DERM responds by blinking the SIR tell tale 7 to 9 times.

When the engine is being cranked system voltage is applied to the DERM at the "CRANK" input. The DERM grounds the lamp circuit until system voltage is removed from the "CRANK" input. This results in a steady SIR tell tale during cranking.

After cranking the DERM the SIR tell tale will again blink 7 to 9 times.

Notes on Fault Tree:

1) The SIR tell tale should blink 7 to 9 times as the ignition is just turned on. If the lamp does not respond use CHART C or D to diagnose the SIR tell tale malfunction.
2) As the engine is "Cranked" the SIR tell tale should remain on steady.
If the lamp does not respond use CHART E to diagnose the malfunction.
3) The SIR tell tale has completed the "Bulb Check" and remains on indicating a current code has been detected. At this point a TECH 1 tool must be used to diagnose the malfunction.
4) After "Cranking" the engine the SIR tell tale should blink 7 to 9 times and then go out. If the lamp begins to flash again (Code 12), there is a system fault. Use CHART F to diagnose the malfunction.
5) The SIR tell tale has completed the "Bulb Check" and is indicating no current codes exist.
6) Record all codes (both History and Current) onto the repair order. If there are no codes (History or Current) record this fact onto the repair order. No further diagnosis is required. If the TECH 1 indicates that no data is being received from the DERM, then the data link needs to be checked.
7) If multiple codes are displayed (History or Current) the order that the codes are diagnosed is very important. Diagnose from lowest to highest.
8) On some occasions the Tech 1 tool does not log on to the SIR system the first time "F2: Fault Codes" is selected. In this case "EXIT" to previous display. Selecting "ENTER" could clear non current codes. If the Tech 1 displays "serial data fail" again the additional test is to check whether or not the Tech 1 receives data from the engine management ECM in order to determine if there is a tool or SIR system problem.

SIR DIAGNOSTIC SYSTEM CHECK

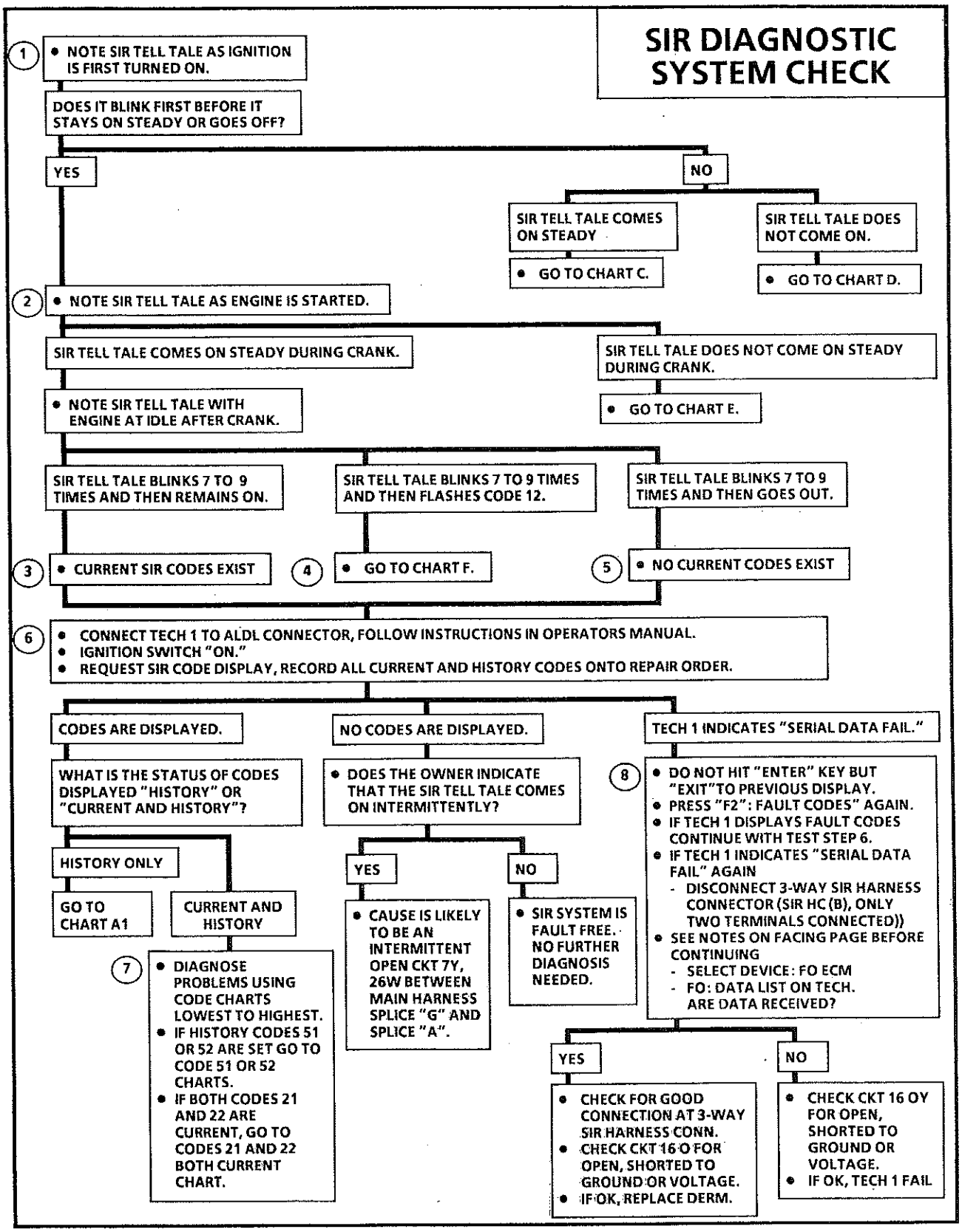

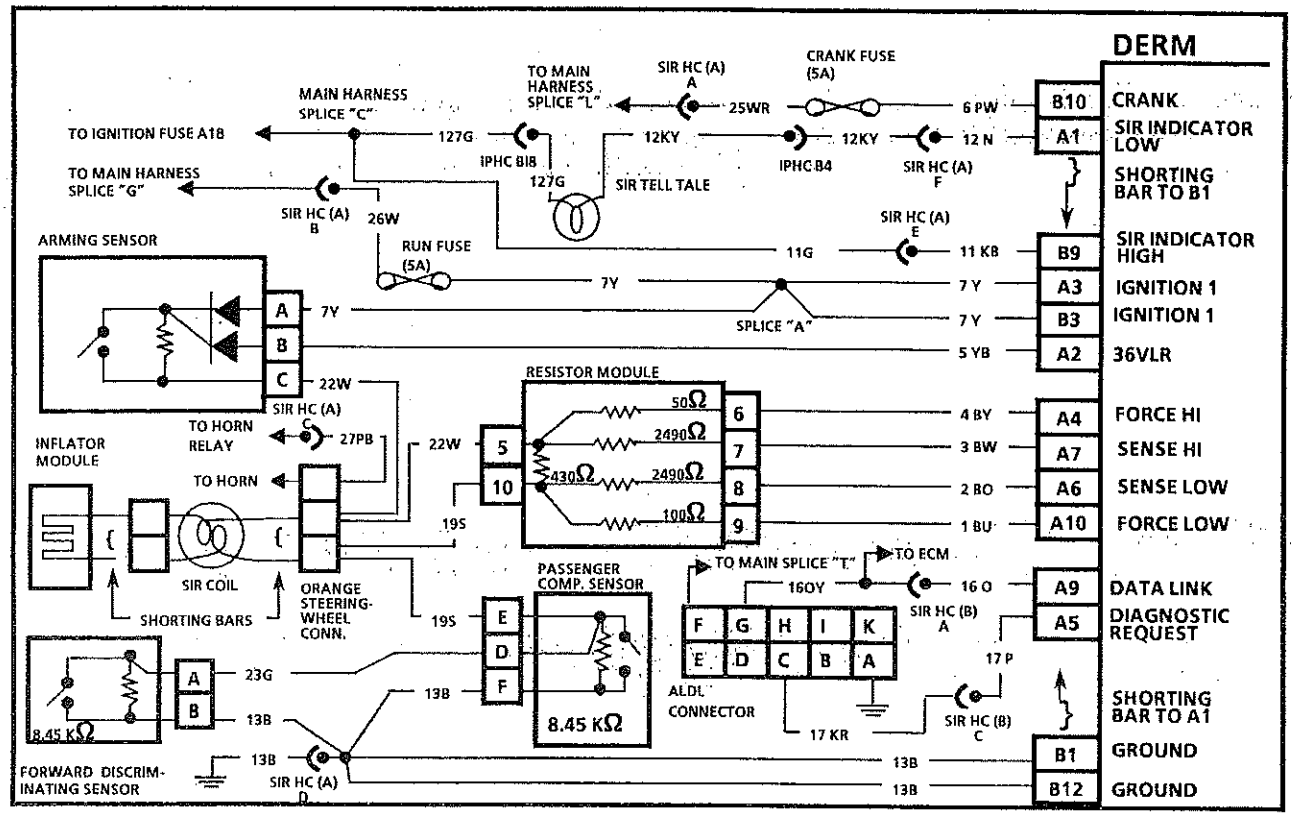

CHART A-1

TECH 1 HISTORY CODE DIAGNOSIS

Description:

When the Ignition Switch is first turned "ON" system voltage is applied through Ignition Fuse A18 to "SIR Indicator High" (B9) and to the SIR tell tale lamp which is connected to "SIR Indicator Low" (A1). The Run Fuse also applies system voltage to the "Ignition 1" inputs (A3 and B3). The DERM responds by blinking the SIR tell tale 7 to 9 times.

When the engine is being cranked system voltage is applied to the DERM at the "CRANK" input. The DERM grounds the lamp circuit until system voltage is removed from the "CRANK" input. This results in a steady SIR tell tale during cranking.

After cranking the DERM the SIR tell tale will again blink 7 to 9 times.

Notes on Fault Tree:

1) The DERM determines that the Arming Sensor is closed when system voltage or more is present at the "Sense Hi" input, and it determines that a Discriminating Sensor is closed when it notes low voltage at the "Sense Low" input. There are some faults that may "look" like an accident to the DERM, and therefore record a Code 51. History Code 51 therefore is not proof that the vehicle was in an accident.
2) If a history Code 51 is set, history Code 34 will not set. Therefore, any conditions which will cause a current Code 34 to set will not set a history Code 34 if a history Code 51 is set. Lotus Cars, USA **must** be made aware of History Code 51 stored.
3) Checks for intermittent electrical conditions within the steering column and wiring between Resistor Module and DERM.
4) Checks for intermittent shorts in the 36VLR wiring (CKT 5YB).
5) Checks for misinstalled Fuse A18 and SIR tell tale bulb or uncleared Code 61 after a completed wiring repair on CKT 11G/11KB. Also checks for intermittent faults in CKT's 1BU and 12N/12KY.

CAUTION: To avoid deployment when troubleshooting the SIR system, use Digital Volt Ohm Meter (DVOM) T000T1034. DO NOT USE any type of electrical equipment other than those specified in this manual. Never use a non-powered probe type tester. Instructions in this manual must be followed carefully, otherwise personal injury may result.

CHART A-1

TECH 1 HISTORY CODE DIAGNOSIS

- IGNITION "OFF".
- DISCONNECT 6-WAY SIR HARNESS CONNECTOR (SIR HC (A)).
- DISCONNECT ORANGE 3-WAY STEERING WHEEL CONNECTOR.
- CONNECT SIR LOAD T000T1035 TO THE SIR HARNESS SIDE (CAR SIDE) OF THE ORANGE 3-WAY STEERING WHEEL CONNECTOR.
- RECONNECT 6-WAY SIR HARNESS CONNECTOR (SIR HC (A)).

IS THERE MORE THAN ONE HISTORY CODE SET?

YES
- GO TO CHART A2.

NO

IS HISTORY CODE 51 SET?

YES

DOES OWNER INDICATE THAT THE SIR TELL TALE WAS ON INTERMITTENTLY OR WAS ON PRIOR TO BRINGING THE VEHICLE IN FOR SERVICE?

NO

(1)
- CODE 51 INDICATES THAT THE DERM "DETECTED" AN ACCIDENT.
- GO TO CODE 51 CHART.

YES

(2)
- CAUSE IS LIKELY TO BE AN INTERMITTENT OPEN IN CKT 7Y.
- CHECK FOR GOOD TERMINAL CONTACT AT ARMING SENSOR TERMINAL "A".
- INSPECT CKT 7Y BETWEEN ARMING SENSOR HARNESS CONNECTOR AND RUN FUSE.
- REPAIR AS NEEDED FOLLOWING INSTRUCTIONS IN SECTION WB.1-J.
- RECONNECT ALL SIR COMPONENTS, CLEAR SIR CODES AND REPEAT "SIR DIAGNOSTIC SYSTEM CHECK."
- CONTACT LOTUS CARS, USA.

NO

IS HISTORY CODE 21, 22, 24 OR 26 SET?

YES

(3)
- CHECK FOR INTERMITTENT OPENS, SHORTS TO 12 VOLTS OR GROUND WITHIN THE STEERING COLUMN. WITH THE IGNITION ON, ENGINE AT IDLE, SLOWLY TURN THE STEERING WHEEL FROM FULL LOCK LEFT TO FULL LOCK RIGHT A NUMBER OF TIMES. OBSERVE THE SIR TELL TALE. IF THE LIGHT COMES ON A CODE IS NOW CURRENT. WITH THE WHEEL IN THIS POSITION RETURN TO THE "SIR DIAGNOSTIC SYSTEM CHECK".
- CHECK FOR INTERMITTENT OPENS, SHORTS TO 12 VOLTS OR GROUND IN CKT'S 4BY, 3BW, 2BO, IBU, 19S AND 22W BY SLIGHTLY PULLING AND PUSHING WIRING AT RESISTOR MODULE AND DERM HARNESS CONNECTOR. IF SIR LAMP COMES ON A CODE WOULD BE CURRENT. GO TO "SIR DIAGNOSTIC SYSTEM CHECK" AGAIN.

NO

IS HISTORY CODE 33 SET?

NO

IS HISTORY CODE 41 OR 42 SET?

YES
- GO TO CODE 33 CHART.

NO

IS HISTORY CODE 61 SET?

YES

(4)
- INSPECT 36VLR CKT 5YB BETWEEN DERM AND ARMING SENSOR FOR INTERMITTENT SHORTS TO GROUND OR VOLTAGE. REPAIR AS NEEDED FOLLOWING INSTRUCTIONS IN SECTION WB.1-J.
- RECONNECT ALL SIR COMPONENTS, CLEAR SIR CODES AND REPEAT "SIR DIAGNOSTIC SYSTEM CHECK."

NO

YES

(5)
- THIS CODE WILL SET IF FUSE A18 OR THE SIR TELL TALE BULB IS OPEN OR REMOVED. CHECK FOR WIRING FAULT IN CKT 11G/11KB/127G.
- IF NO KNOWN FAULT EXISTS IN CKT 11G/11KB/127G, INSPECT CKT 1BU BETWEEN RESISTOR MODULE AND DERM FOR POOR CONNECTION OR OPEN. CHECK CKT 12KY/12N BETWEEN SIR TELL TALE AND DERM FOR POOR CONNECTION, OPEN, SHORTS TO GROUND OR VOLTAGE. REPAIR AS NEEDED FOLLOWING INSTRUCTIONS IN SECTION WB.1-J.
- RECONNECT ALL SIR COMPONENTS, CLEAR SIR CODES AND REPEAT "SIR DIAGNOSTIC SYSTEM CHECK."

- GO TO CHART A-3.

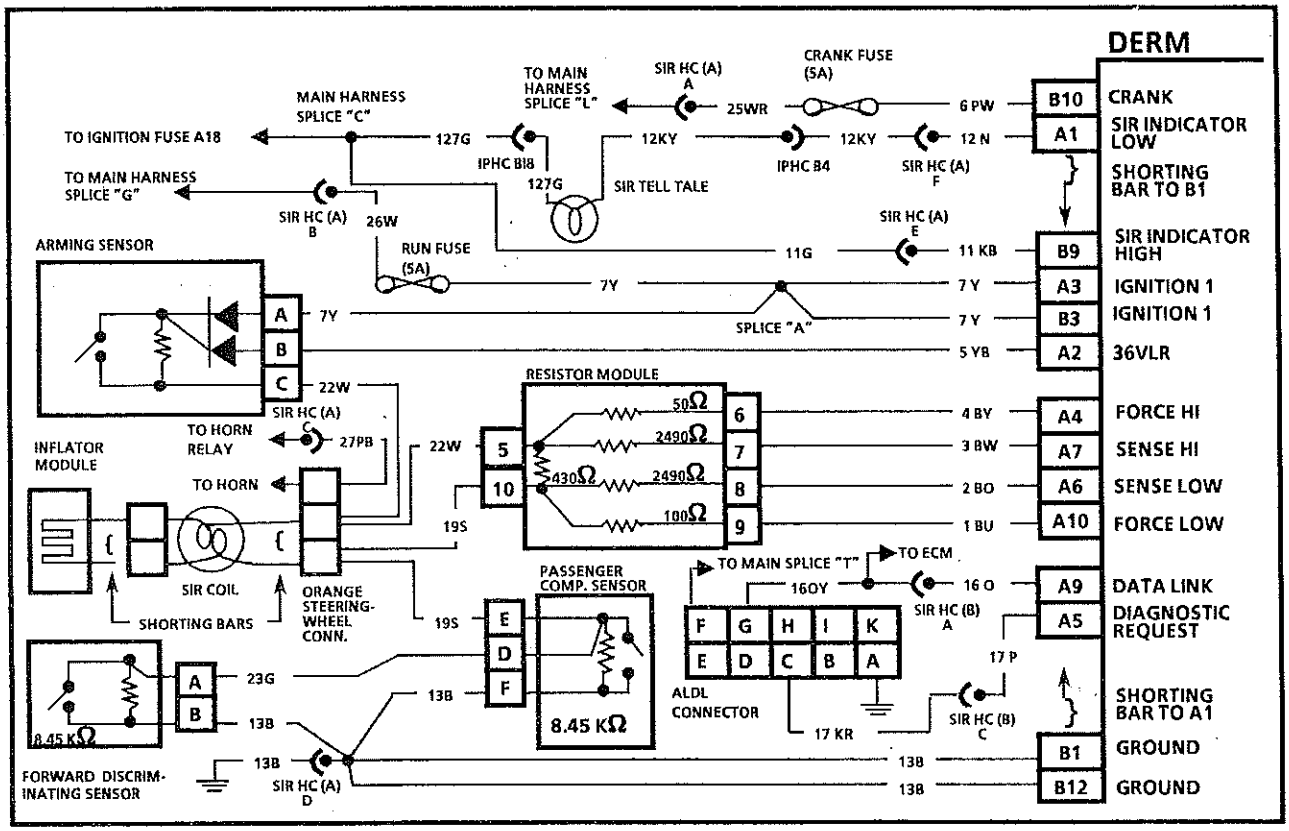

CHART A-2 (Page 1 of 2)

TECH 1 HISTORY CODE DIAGNOSIS

Description:

When the Ignition Switch is first turned "ON" system voltage is applied through Ignition Fuse A18 to "SIR Indicator High" (B9) and to the SIR tell tale which is connected to "SIR Indicator Low" (A1). The Run Fuse also applies system voltage to the "Ignition 1" inputs (A3 and B3). The DERM responds by blinking the SIR tell tale 7 to 9 times.

When the engine is being cranked system voltage is applied to the DERM at the "CRANK" input. The DERM grounds the lamp circuit until system voltage is removed from the "CRANK" input. This results in a steady SIR tell tale during cranking.

After cranking the DERM the SIR tell tale will again blink 7 to 9 times.

Notes on Fault Tree:

1) Checks for intermittent shorts to system voltage in the 36VLR wiring (CKT 5YB).
2) Checks for intermittent shorts to ground in the 36VLR wiring (CKT 5YB).
3) Checks for intermittent open in the 36VLR wiring (CKT 5YB).
4) Checks for intermittent open in the "Force Hi" and "Force Low" wiring (CKT 4BY and 1BU).
5) Checks for intermittent opens, shorts to ground or system voltage in the "Sense Low" wiring (CKT 2BO).
6) Checks for open shorts to system voltage in the deployment loop (CKT 19S, 22W, 23G) or in the diagnostic circuits (CKT 22W, 19S, 1BU, 4BY, 2BO and 3BW).

CAUTION: To avoid deployment when troubleshooting the SIR system, use Digital Volt Ohm Meter (DVOM) T000T1034. DO NOT USE any type of electrical equipment other than those specified in this manual. Never use a non-powered probe type tester. Instructions in this manual must be followed carefully, otherwise personal injury may result.

CHART A-2
(PAGE 1 OF 2) TECH 1 TOOL HISTORY CODE DIAGNOSIS

- CONTINUED FROM CHART A-1

- IGNITION "OFF".
- DISCONNECT 6-WAY SIR HARNESS CONNECTOR (SIR HC (A)).
- DISCONNECT ORANGE 3-WAY STEERING WHEEL CONNECTOR.
- CONNECT SIR LOAD T000T1035 TO THE SIR HARNESS SIDE (CAR SIDE) OF THE ORANGE 3-WAY STEERING WHEEL CONNECTOR.
- RECONNECT 6-WAY SIR HARNESS CONNECTOR (SIR HC (A)).

ARE HISTORY CODES 33 AND 42 SET WITH ANY OF THE FOLLOWING?
A) NO OTHER CODES B) CODE 41 C) CODE 61

YES (1)
- CAUSE IS LIKELY TO BE AN INTERMITTENT SHORT TO SYSTEM VOLTAGE IN 36VLR CIRCUIT 5YB.
- INSPECT WIRING BETWEEN DERM AND ARMING SENSOR, IF WIRING IS CUT, PINCHED OR SHORTED. REPAIR AS NEEDED FOLLOWING INSTRUCTIONS IN SECTION WB.1-J.
- RECONNECT ALL SIR COMPONENTS, CLEAR SIR CODES AND REPEAT "SIR DIAGNOSTIC SYSTEM CHECK."

NO

ARE BOTH HISTORY CODES 32 AND 42 SET WITH ANY OF THE FOLLOWING?
A) NO OTHER CODES B) CODE 41 C) CODE 61

YES (2)
- CAUSE IS LIKELY TO BE AN INTERMITTENT SHORT TO GROUND IN 36VLR CIRCUIT 5YB.
- INSPECT WIRING BETWEEN DERM AND ARMING SENSOR, IF WIRING IS CUT, PINCHED OR SHORTED. REPAIR AS NEEDED FOLLOWING INSTRUCTIONS IN SECTION WB.1-J.
- RECONNECT ALL SIR COMPONENTS, CLEAR SIR CODES AND REPEAT "SIR DIAGNOSTIC SYSTEM CHECK."

NO

ARE BOTH CODES 24 AND 31 SET WITH ANY OF THE FOLLOWING?
A) NO OTHER CODES B) CODE 61

YES (3)
- CAUSE IS LIKELY TO BE AN INTERMITTENT OPEN IN 36VLR CIRCUIT 5YB.
- INSPECT WIRING BETWEEN DERM AND ARMING SENSOR, IF WIRING IS CUT OR PINCHED. REPAIR AS NEEDED FOLLOWING INSTRUCTIONS IN SECTION WB.1-J.
- RECONNECT ALL SIR COMPONENTS, CLEAR SIR CODES AND REPEAT "SIR DIAGNOSTIC SYSTEM CHECK."

NO

ARE BOTH CODES 21 AND 22 SET?

YES (4)
- CHECK CKT 4BY FOR INTERMITTENT OPEN
- CHECK CKT'S 19S, 22W, 4BY OR 2BO FOR INTERMITTENT SHORTED TO CKT 1BU. REPAIR AS NEEDED FOLLOWING INSTRUCTIONS IN SECTION WB.1-J.
- RECONNECT ALL SIR COMPONENTS, CLEAR CODES AND REPEAT "SIR DIAGNOSTIC SYSTEM CHECK".

NO

ARE CODES 24 AND 26 SET?

YES (5)
- INSPECT CIRCUIT 2BO FOR OPEN, SHORT TO GROUND OR SYSTEM VOLTAGE. REPAIR AS NEEDED FOLLOWING INSTRUCTIONS IN SECTION WB.1-J.
- RECONNECT ALL SIR COMPONENTS, CLEAR SIR CODES AND REPEAT "SIR DIAGNOSTIC SYSTEM CHECK."

NO

ARE BOTH CODES 24 AND 34 SET?

YES (6)
- INSPECT FOR SHORTS TO GROUND ON CKTS 23G, 22W, 19S, 1BU, 4BY, 2BO OR 3BW AND FOR OPEN CKT 22W BETWEEN STEERING WHEEL CONNECTOR AND ARMING SENSOR. REPAIR AS NEEDED FOLLOWING INSTRUCTIONS IN SECTION WB.1-J.
- RECONNECT ALL SIR COMPONENTS, CLEAR SIR CODES AND REPEAT "SIR DIAGNOSTIC SYSTEM CHECK."

NO

SEE CHART A-2 (PAGE 2 OF 2)

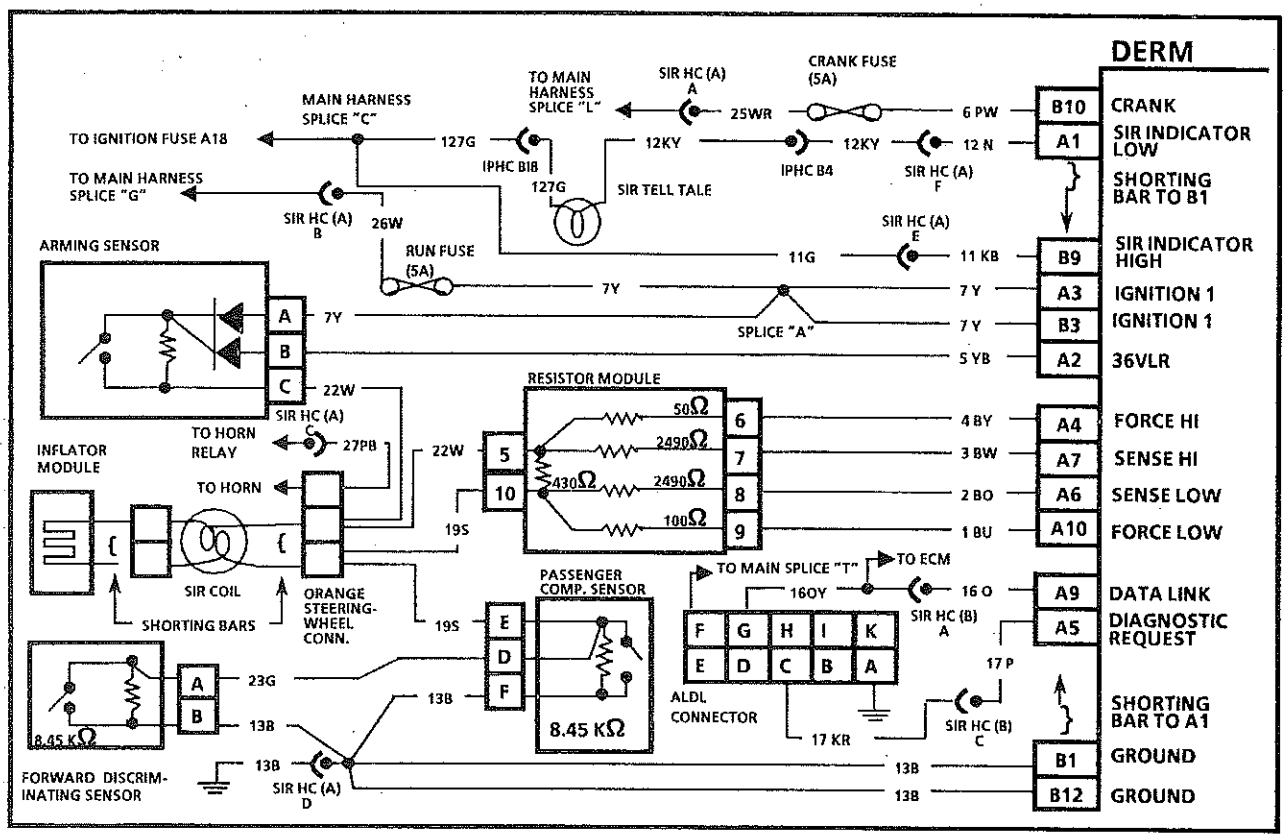

CHART A-2 (Page 2 of 2)

TECH 1 HISTORY CODE DIAGNOSIS

Description:

When the Ignition Switch is first turned "ON" system voltage is applied through Ignition Fuse A18 to "SIR Indicator High" (B9) and to the SIR tell tale which is connected to "SIR Indicator Low" (A1). The Run Fuse also applies system voltage to the "Ignition 1" inputs (A3 and B3). The DERM responds by blinking the SIR tell tale 7 to 9 times.

When the engine is being cranked system voltage is applied to the DERM at the "CRANK" input. The DERM grounds the lamp circuit until system voltage is removed from the "CRANK" input. This results in a steady SIR tell tale during cranking.

After cranking the DERM the SIR tell tale will again blink 7 to 9 times.

Notes on Fault Tree:

1) Intermittent shorts to CKT 5YB would set Codes 23 <u>and</u> 34 during "Turn On" phase. If the same problem occurs during "Engine run" Code 23 would be set only.
2) Code 26 and 35 would be set, if CKT 3BW was intermittently shorted to CKT 5YB.

CAUTION: To avoid deployment when troubleshooting the SIR system, use Digital Volt Ohm Meter (DVOM) T000T1034. DO NOT USE any type of electrical equipment other than those specified in this manual. Never use a non-powered probe type tester. Instructions in this manual must be followed carefully, otherwise personal injury may result.

CHART A-2
(PAGE 2 OF 2) TECH 1 TOOL HISTORY CODE DIAGNOSIS

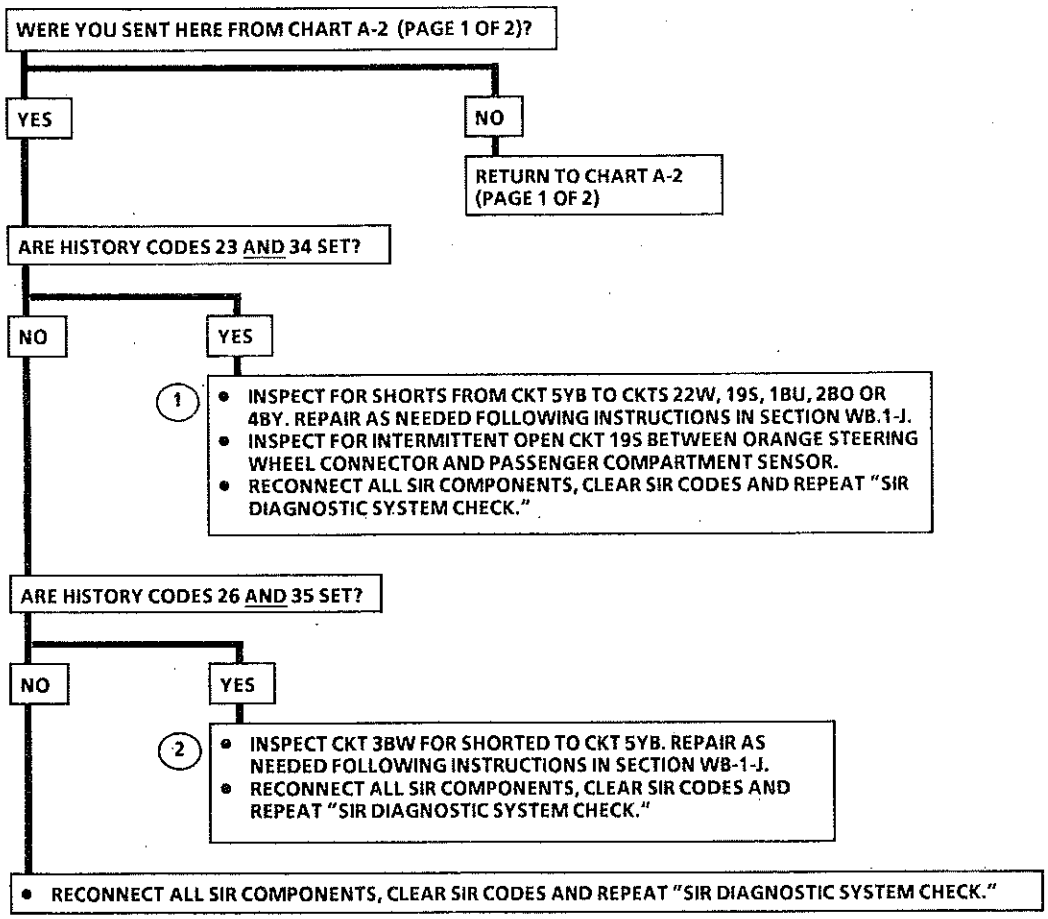

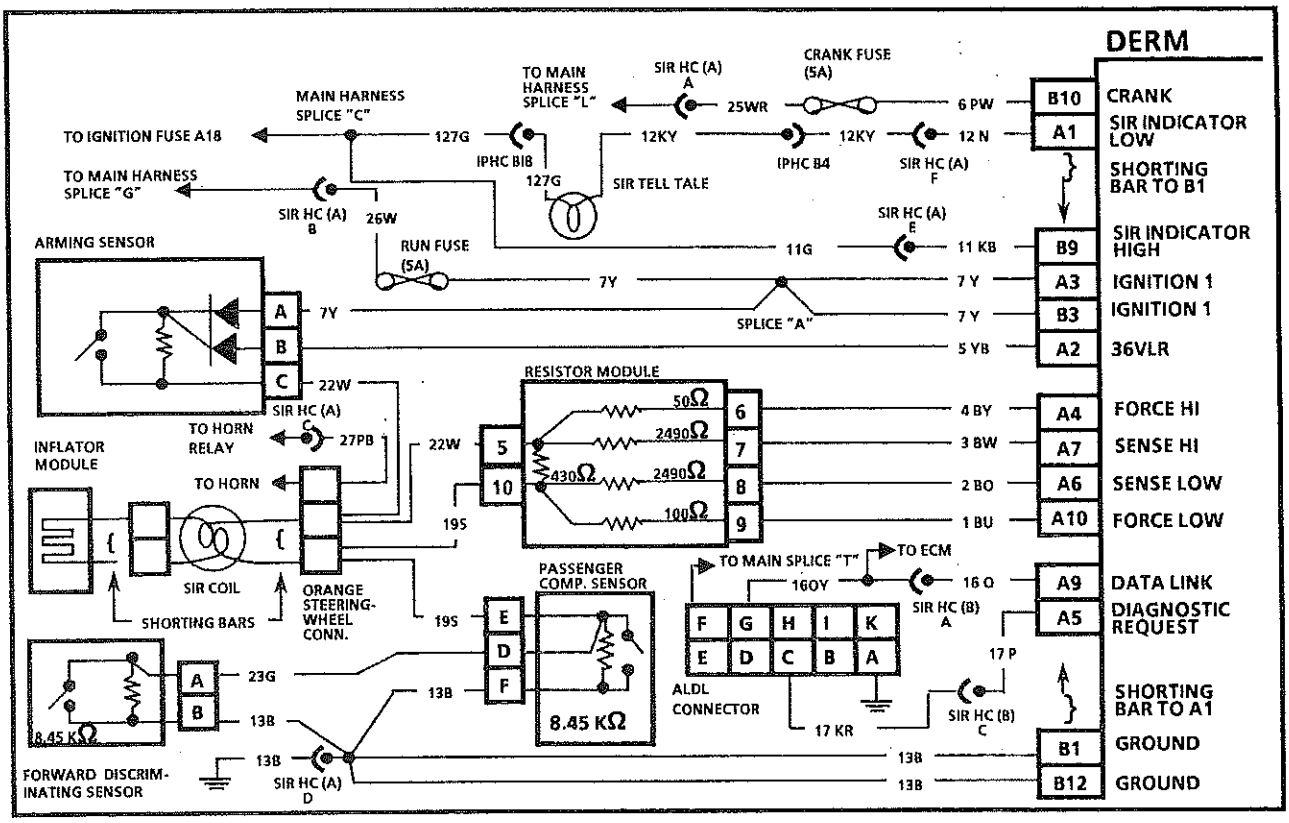

CHART A-3

TECH 1 HISTORY CODE DIAGNOSIS

Description:

When the Ignition Switch is first turned "ON" system voltage is applied through Ignition Fuse A18 to "SIR Indicator High" (B9) and to the SIR tell tale lamp which is connected to "SIR Indicator Low" (A1). The Run Fuse also applies system voltage to the "Ignition 1" inputs (A3 and B3). The DERM responds by blinking the SIR tell tale 7 to 9 times.

When the engine is being cranked system voltage is applied to the DERM at the "CRANK" input. The DERM grounds the lamp circuit until system voltage is removed from the "CRANK" input. This results in a steady SIR tell tale during cranking.

After cranking the DERM the SIR tell tale will again blink the 7 to 9 times.

Notes on Fault Tree:

1) Checks for intermittent opens in the ground path of the deployment loop of both discriminating sensors (CKT 13B - both branches).
2) Checks for intermittent shorts between 36VLR CKT 5YB and CKT 22W, 23G, 1BU, 2BO, 19S and 4BY of the SIR wiring harness.
3) Checks for intermittent opens in the 36VLR wiring (CKT 5YB).
4) Checks for intermittent open CKT 7Y between the Run Fuse and the arming sensor.

CAUTION: To avoid deployment when troubleshooting the SIR system, use Digital Volt Ohm Meter (DVOM) T000T1034. DO NOT USE any type of electrical equipment other than those specified in this manual. Never use a non-powered probe type tester. Instructions in this manual must be followed carefully, otherwise personal injury may result.

CHART A-3

TECH 1 HISTORY CODE DIAGNOSIS

- CONTINUED FROM CHART A1.

IS HISTORY CODE 35 SET?

NO

YES

(1)
- INSPECT CKT 23G FROM PASSENGER COMP. SENSOR TO FORWARD DISRIMINATING SENSOR AND CKT 13B FROM FORWARD DISCRIMINATING SENSOR AND COMPARTMENT SENSOR TO GROUND. AN INTERMITTENT OPEN IN ANY OF THESE CIRCUITS WILL CAUSE THIS CODE. CHECK CKT 3BW FOR SHORTED TO CKT 5YB, IF CODE 35 AND CODE 26 ARE SET. REPAIR AS NEEDED FOLLOWING INSTRUCTIONS IN SECTION WB.1-J.
- RECONNECT ALL SIR COMPONENTS, CLEAR SIR CODES AND REPEAT "SIR DIAGNOSTIC SYSTEM CHECK."

IS HISTORY CODE 23 SET?

NO

YES

(2)
- INSPECT 36 VLR CKT 5YB FOR SHORTS TO CKTS 22W, 23G, 19S, 1BU, 2BO OR 4BY. ASSURE PROPER CONNECTION AT THE SENSORS. INSPECT FOR CONNECTOR DAMAGE. REPLACE AS NEEDED FOLLOWING INSTRUCTIONS IN SECTION WB.1-J.
- RECONNECT ALL SIR COMPONENTS, CLEAR SIR CODES AND REPEAT "SIR DIAGNOSTIC SYSTEM CHECK."

IS HISTORY CODE 31 SET?

NO

YES

(3)
- INSPECT 36VLR CKT 5YB BETWEEN DERM AND ARMING SENSOR FOR INTERMITTENT OPEN. ASSURE GOOD CONNECTION AT DERM AND ARMING SENSOR. ASSURE CONNECTOR LOCKS ARE INSTALLED. REPAIR AS NEEDED FOLLOWING INSTRUCTIONS IN SECTION WB.1-J.
- RECONNECT ALL SIR COMPONENTS, CLEAR SIR CODES AND REPEAT "SIR DIAGNOSTIC SYSTEM CHECK."

IS HISTORY CODE 34 SET?

NO

YES

(4)
- INSPECT CKT 7Y BETWEEN RUN FUSE AND ARMING SENSOR FOR INTERMITTENT OPEN. ASSURE GOOD CONNECTION AT ARMING SENSOR. ASSURE CONNECTOR LOCKS ARE INSTALLED. REPAIR AS NEEDED FOLLOWING INSTRUCTIONS IN SECTION WB.1-J.
- RECONNECT ALL SIR COMPONENTS, CLEAR SIR CODES AND REPEAT "SIR DIAGNOSTIC SYSTEM CHECK."

- REPEAT "SIR DIAGNOSTIC SYSTEM CHECK."

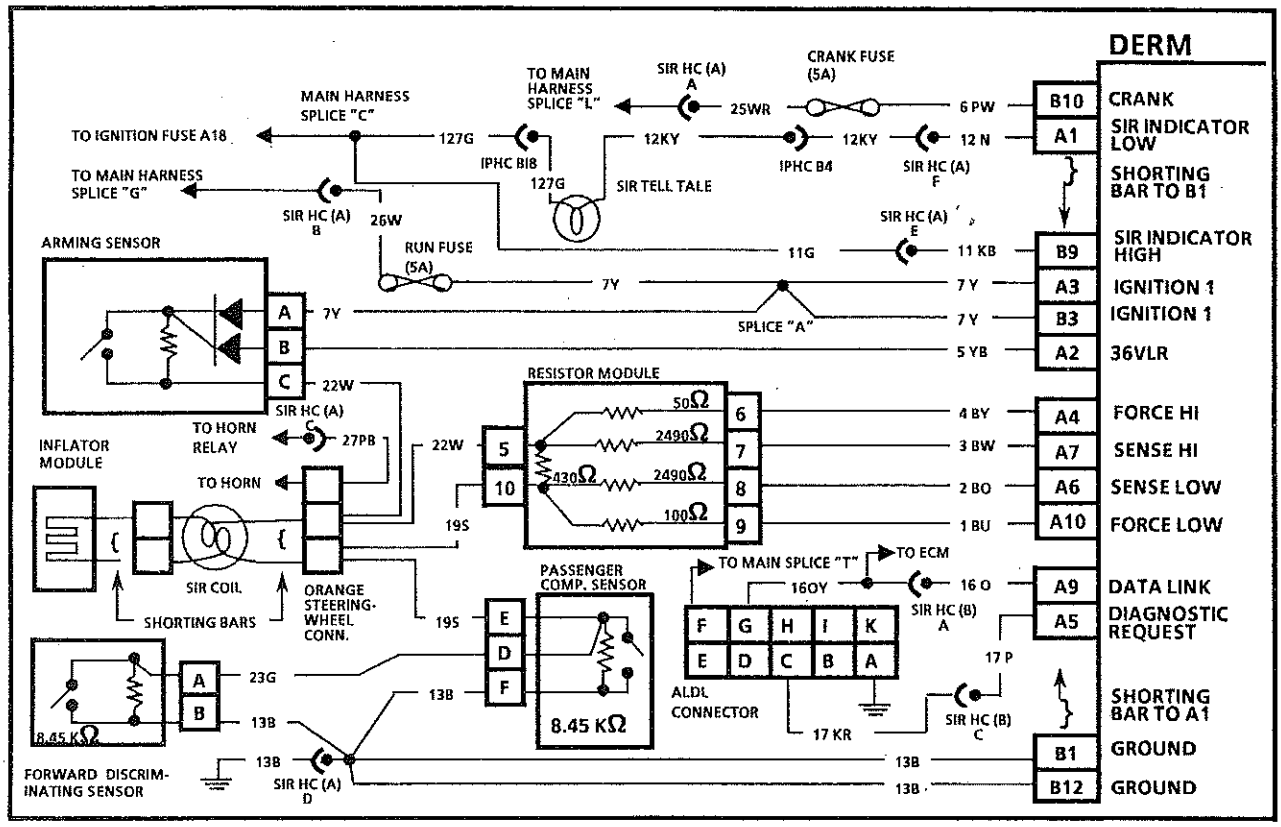

CHART C

SIR TELL TALE COMES "ON" STEADY

Description:

When the Ignition Switch is first turned "ON" system voltage is applied through Ignition Fuse A18 to "SIR Indicator High" (B9) and to the SIR tell tale lamp which is connected to "SIR Indicator Low" (A1). The Run Fuse also applies system voltage to the "Ignition 1" inputs (A3 and B3). The DERM responds by blinking the SIR tell tale 7 to 9 times.

When the engine is being cranked system voltage is applied to the DERM at the "CRANK" input. The DERM grounds the lamp circuit until system voltage is removed from the "CRANK" input. This results in a steady SIR tell tale during cranking.

After cranking the DERM the SIR tell tale will again blink 7 to 9 times.

Notes on Fault Tree:

1) An open Run Fuse would result in a loss of Ignition 1 voltage at the DERM. The DERM will respond by grounding the lamp circuit ("SIR Indicator Low") whenever the Ignition Switch is "ON."
2) If the DERM is disconnected the shorting bar between terminals "A1" and "B1" of the DERM harness connector will ground the lamp circuit and turn the indicator lamp "ON".
3) Checks for a short to ground in the "Ignition 1" circuits.
4) Checks if there is a short to ground on the low side of the lamp circuit external of the DERM. The SIR Load Tool prevents the shorting bar in the DERM harness connector from grounding the lamp circuit.
5) Checks if short to ground is in the DERM or the "Ignition 1" circuits.
6) If vehicle blows the Run Fuse intermittently, the cause may be an intermittent short on CKT 7Y.
7) Checks for "Ignition 1" voltage at the DERM. If the "Ignition 1" circuits are open the DERM will ground the lamp circuit whenever the Ignition Switch is "ON" (if the "SIR Indicator High" circuit is good).

CAUTION: To avoid deployment when troubleshooting the SIR system, use Digital Volt Ohm Meter (DVOM) T000T1034. DO NOT USE any type of electrical equipment other than those specified in this manual. Never use a non-powered probe type tester. Instructions in this manual must be followed carefully, otherwise personal injury may result.

CHART C

SIR TELL TALE COMES "ON" STEADY

- IGNITION "OFF".
- DISCONNECT 6-WAY SIR HARNESS CONNECTOR (SIR HC (A)).
- DISCONNECT ORANGE 3-WAY STEERING WHEEL CONNECTOR.
- CONNECT SIR LOAD T000T1035 TO THE SIR HARNESS SIDE (CAR SIDE) OF THE ORANGE 3-WAY STEERING WHEEL CONNECTOR.
- RECONNECT 6-WAY SIR HARNESS CONNECTOR (SIR HC (A)).

(1)
- IGNITION SWITCH "OFF."
- CHECK SIR RUN FUSE.

FUSE OK

(2)
- CHECK THAT DERM HARNESS CONNECTOR IS SECURELY CONNECTED TO THE DERM.

GOOD CONNECTION

(4)
- IGNITION SWITCH "OFF."
- DISCONNECT DERM.
- INSTALL DERM CONNECTOR OF SIR LOAD TESTER T000T1035 ON HARNESS CONNECTOR.
- IGNITION SWITCH "ON."
- OBSERVE SIR TELL TALE

LIGHT OFF

(7)
- IGNITION SWITCH "ON."
- MEASURE VOLTAGE FROM DERM HARNESS CONNECTOR TERMINALS "A3" AND "B3" TO GROUND.

SYSTEM VOLTAGE AT BOTH TERMINALS

- REPLACE DERM.
- RECONNECT ALL SIR COMPONENTS, REPEAT "SIR DIAGNOSTIC SYSTEM CHECK."

LESS THAN SYSTEM VOLTAGE BOTH TERMINALS

- REPAIR OPEN IN THE IGNITION CIRCUIT 7Y BETWEEN RUN FUSE AND SPLICE "A".
- RECONNECT ALL SIR COMPONENTS.
- REPEAT "SIR DIAGNOSTIC SYSTEM CHECK."

LIGHT ON

- REPAIR SHORT TO GROUND IN CIRCUIT 12KY/12N AND CHECK THE SHORTING BAR OF THE DERM HARNESS CONNECTOR.
- RECONNECT ALL SIR COMPONENTS.
- REPEAT "SIR DIAGNOSTIC SYSTEM CHECK".

POOR CONNECTION

- SECURE HARNESS CONNECTION
- RECONNECT ALL SIR COMPONENTS, REPEAT "SIR DIAGNOSTIC SYSTEM CHECK."

FUSE OPEN

(3)
- IGNITION SWITCH "OFF."
- REPLACE SIR RUN FUSE.
- IGNITION SWITCH "ON."
- CHECK RUN FUSE.

FUSE OPEN

(5)
- IGNITION SWITCH "OFF."
- DISCONNECT DERM.
- DISCONNECT ARMING SENSOR.
- REMOVE RUN FUSE.
- IGNITION SWITCH "ON."
- MEASURE VOLTAGE ACROSS RUN FUSE TERMINALS.

SYSTEM VOLTAGE

- REPAIR SHORT TO GROUND IN THE IGNITION CIRCUIT 7Y
- REPLACE FUSE.
- RECONNECT ALL SIR COMPONENTS, CLEAR SIR CODES.
- REPEAT "SIR DIAGNOSTIC SYSTEM CHECK."

LESS THAN SYSTEM VOLTAGE

- MEASURE CONTINUITY FROM ARMING SENSOR CONNECTOR PIN A TO GROUND

CONTINUITY

- REPLACE ARMING SENSOR.
- REPLACE RUN FUSE.
- RECONNECT ALL SIR COMPONENTS, CLEAR SIR CODES.
- REPEAT "SIR DIAGNOSTIC SYSTEM CHECK."

NO CONTINUITY

- REPLACE DERM.
- RECONNECT ALL SIR COMPONENTS.
- REPEAT "SIR DIAGNOSTIC SYSTEM CHECK."

FUSE OK

(6)
- REPEAT "SIR DIAGNOSTIC SYSTEM CHECK."

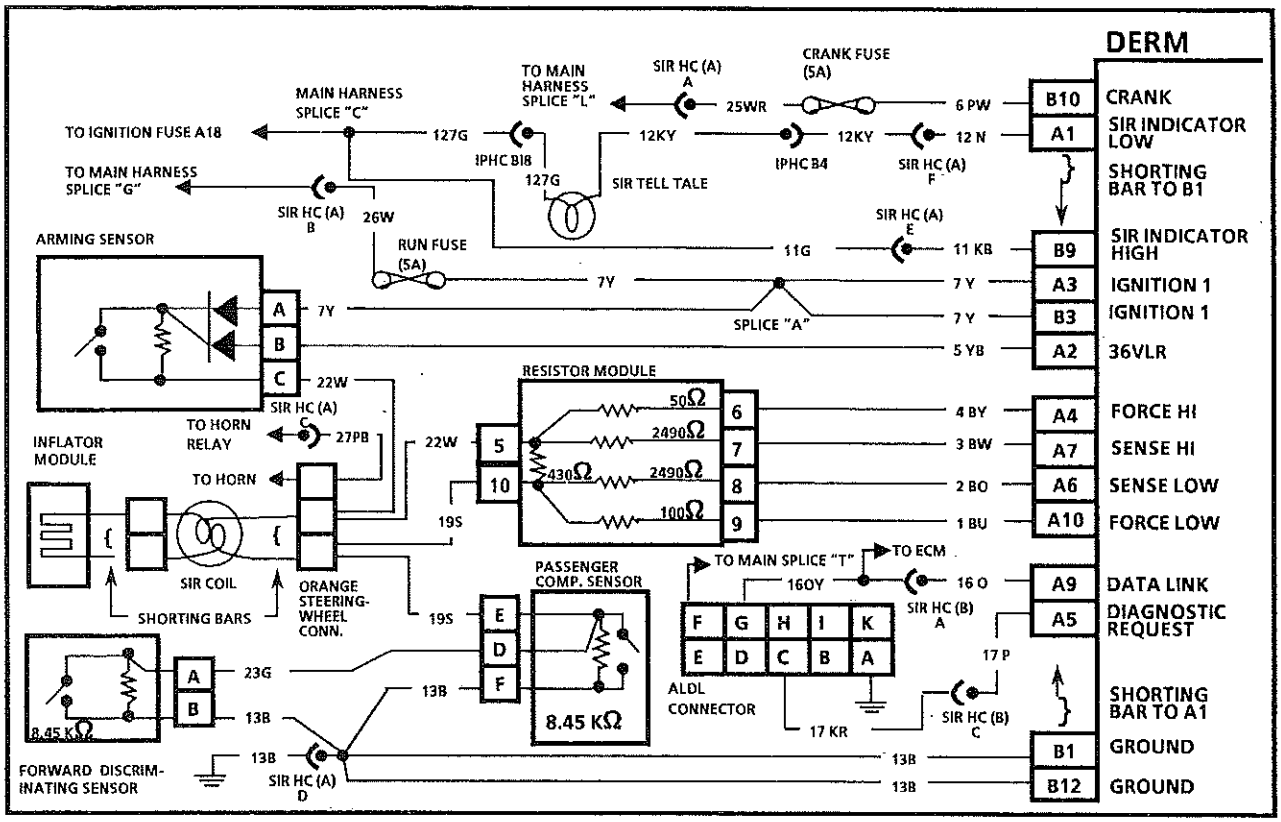

CHART D

SIR TELL TALE DOES NOT COME "ON"

Description:

When the Ignition Switch is first turned "ON" system voltage is applied through the Run Fuse and Ignition Fuse A18 to the DERM at the "SIR Indicator Low", "SIR Indicator High" and the "Ignition 1" inputs. The DERM responds by blinking the SIR tell tale 7 to 9 times with a lamp driver at the "SIR Indicator Low" input.

When the engine is being cranked system voltage is applied to the DERM at the "CRANK" input. The DERM grounds the lamp circuit until system voltage is removed from the "CRANK" input. This results in a steady SIR tell tale during cranking.

After cranking the DERM the SIR tell tale will again blink 7 to 9 times if the Ignition Switch is "ON."

Notes on Fault Tree:

1) Checks if high side (power side) of the lamp circuit is good. This circuit powers a number of tell tale lamps within the facia (such as the "Check Engine Light" and "Oil" indicators). If these other indicators are operative, then the power supply to the SIR tell tale is not suspect.
2) Checks Fuse A18 which is in the high side (power side) of the lamp circuit.
3) Checks for a short to ground in Fuse A18 circuits.
4) Checks if the SIR tell tale circuit to the DERM is good.
5) Checks if the ground circuits to the DERM are good.

CAUTION: To avoid deployment when troubleshooting the SIR system, use Digital Volt Ohm Meter (DVOM) T000T1034. DO NOT USE any type of electrical equipment other than those specified in this manual. Never use a non-powered probe type tester. Instructions in this manual must be followed carefully, otherwise personal injury may result.

CHART D

SIR TELL TALE DOES NOT COME "ON"

- IGNITION "OFF".
- DISCONNECT 6-WAY SIR HARNESS CONNECTOR (SIR HC (A)).
- DISCONNECT ORANGE 3-WAY STEERING WHEEL CONNECTOR.
- CONNECT SIR LOAD T000T1035 TO THE SIR HARNESS SIDE (CAR SIDE) OF THE ORANGE 3-WAY STEERING WHEEL CONNECTOR.
- RECONNECT 6-WAY SIR HARNESS CONNECTOR (SIR HC (A)).

(1) DO OTHER TELL TALES OPERATE WITH THE IGNITION ON AND ENGINE OFF?

YES

(4)
- DISCONNECT DERM.
- IGNITION SWITCH "ON."
- GROUND DERM HARNESS CONNECTOR TERMINAL "A1".
- OBSERVE SIR TELL TALE LAMP.

NO

(2)
- CHECK FUSE A18 IN FUSE BLOCK.

FUSE OPEN

(3)
- IGNITION SWITCH "OFF."
- REPLACE FUSE A18.
- IGNITION SWITCH "ON".
- CHECK FUSE A18.

FUSE OK

- REFER TO SECTION WB.3-B TO DIAGNOSE TELL TALE POWER SUPPLY CKT FOR AN OPEN CONDITION.
- RECONNECT ALL SIR COMPONENTS.
- REPEAT "SIR DIAGNOSTIC SYSTEM CHECK"

FUSE OPEN

- REFER TO SECTION WB.3-A.
- DIAGNOSE TELL TALE POWER SUPPLY CIRCUIT OR COMPONENTS FOR LOW RESISTANCE TO GROUND.
- REPEAT "SIR DIAGNOSTIC SYSTEM CHECK."

FUSE OK

- RECONNECT ALL SIR COMPONENTS.
- REPEAT "SIR DIAGNOSTIC SYSTEM CHECK."

LAMP ON

(5)
- IGNITION SWITCH "OFF."
- CLOSE ALL DOORS AND TURN OFF ALL INTERIOR LIGHTS.
- MEASURE THE RESISTANCE TO GROUND FROM DERM HARNESS CONNECTOR TERMINALS "B1" AND "B12".

LAMP OFF

- REPAIR OPEN IN CKT 12KY/12N OR INDICATOR BULB.
- REFER TO WIRE REPAIR INSTRUCTIONS IN SECTION WB.1-J.
- RECONNECT ALL SIR COMPONENTS.
- REPEAT "SIR DIAGNOSTIC SYSTEM CHECK."

3 OHMS OR LESS AT BOTH TERMINALS

- REPLACE DERM.
- RECONNECT ALL SIR COMPONENTS.
- REPEAT "SIR DIAGNOSTIC SYSTEM CHECK."

OVER 3 OHMS

- REPAIR OPEN IN THE DERM GROUND CIRCUIT 13B.
- RECONNECT ALL SIR COMPONENTS.
- REPEAT "SIR DIAGNOSTIC SYSTEM CHECK."

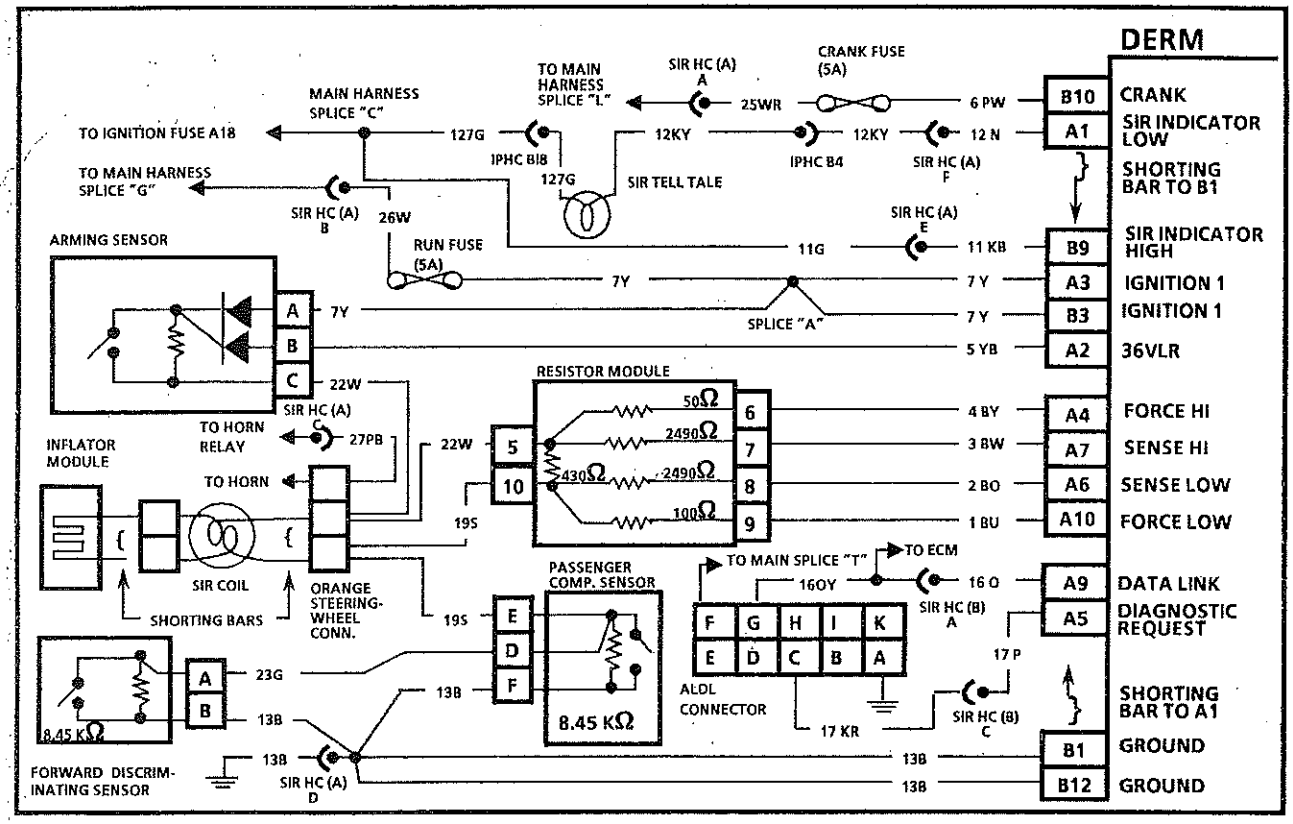

CHART E

SIR TELL TALE DOES NOT COME "ON" STEADY DURING CRANK

Description:

When the Ignition Switch is first turned "ON" system voltage is applied through Ignition Fuse A18 to "SIR Indicator High" (B9) and to the SIR tell tale Lamp which is connected to "SIR Indicator Low" (A1). The Run Fuse also applies system voltage to the "Ignition 1" inputs (A3 and B3). The DERM responds by blinking the SIR tell tale 7 to 9 times.

When the engine is being cranked system voltage is applied to the DERM at the "CRANK" input. The DERM grounds the lamp circuit until system voltage is removed from the "CRANK" input. This results in a steady SIR tell tale during cranking.

After cranking the DERM the SIR tell tale will again blink 7 to 9 times.

Notes on Fault Tree:

1) Checks for system voltage at the "CRANK" input of the DERM during cranking.
2) Checks the "CRANK" circuit for an open or high resistance.

CAUTION: To avoid deployment when troubleshooting the SIR system, use Digital Volt Ohm Meter (DVOM) T000T1034. DO NOT USE any type of electrical equipment other than those specified in this manual. Never use a non-powered probe type tester. Instructions in this manual must be followed carefully, otherwise personal injury may result.

CHART E

SIR TELL TALE DOES NOT COME "ON" STEADY DURING CRANK

- IGNITION "OFF".
- DISCONNECT 6-WAY SIR HARNESS CONNECTOR (SIR HC (A)).
- DISCONNECT ORANGE 3-WAY STEERING WHEEL CONNECTOR.
- CONNECT SIR LOAD T000T1035 TO THE SIR HARNESS SIDE (CAR SIDE) OF THE ORANGE 3-WAY STEERING WHEEL CONNECTOR.
- RECONNECT 6-WAY SIR HARNESS CONNECTOR (SIR HC (A)).

(1)
- BACKPROBE DERM CONNECTOR TERMINAL "B10".
- MEASURE THE VOLTAGE TO GROUND WHILE CRANKING.

LESS THAN CRANKING VOLTAGE

(2)
- IGNITION SWITCH "OFF".
- CHECK CRANK FUSE.

FUSE OPEN

- REPAIR SHORT TO GROUND IN CKT 6PW.
- RECONNECT ALL SIR COMPONENTS.
- REPEAT "SIR DIAGNOSTIC SYSTEM CHECK".

FUSE OK

- DISCONNECT DERM.
- MEASURE RESISTANCE TO GROUND FROM TERMINAL "B10" OF THE DERM HARNESS CONNECTOR.

60 OHMS OR LESS

- CHECK CKT FROM CRANK FUSE TO MAIN HARNESS SPLICE "L" FOR SHORTED TO GROUND.
- IS CKT OK?

YES

- REPLACE DERM
- RECONNECT ALL SIR COMPONENTS.
- REPEAT "SIR DIAGNOSTIC SYSTEM CHECK".

NO

- REPAIR SHORT TO GROUND.
- REFER TO WIRE REPAIR INSTRUCTION IN SECTION WB.1-J.
- RECONNECT ALL SIR COMPONENTS.
- REPEAT "SIR DIAGNOSTIC SYSTEM CHECK".

OVER 60 OHMS

- REPAIR OPEN OR HIGH RESISTANCE IN CKT 6PW AND IN CKT FROM CRANK FUSE TO MAIN HARNESS SPLICE "L".
- REFER TO WIRE REPAIR INSTRUCTIONS IN SECTION WB.1-J.
- RECONNECT ALL SIR COMPONENTS
- REPEAT "SIR DIAGNOSTIC SYSTEM CHECK."

CRANKING VOLTAGE

- CHECK FOR GOOD TERMINAL CONTACT AT DERM TERMINAL "B10", REPAIR AS NEEDED.
- REFER TO WIRE REPAIR INSTRUCTION IN SECTION WB.1-J.
- IF TERMINAL CONTACT IS GOOD, REPLACE DERM.
- RECONNECT ALL SIR COMPONENTS, REPEAT "SIR DIAGNOSTIC SYSTEM CHECK."

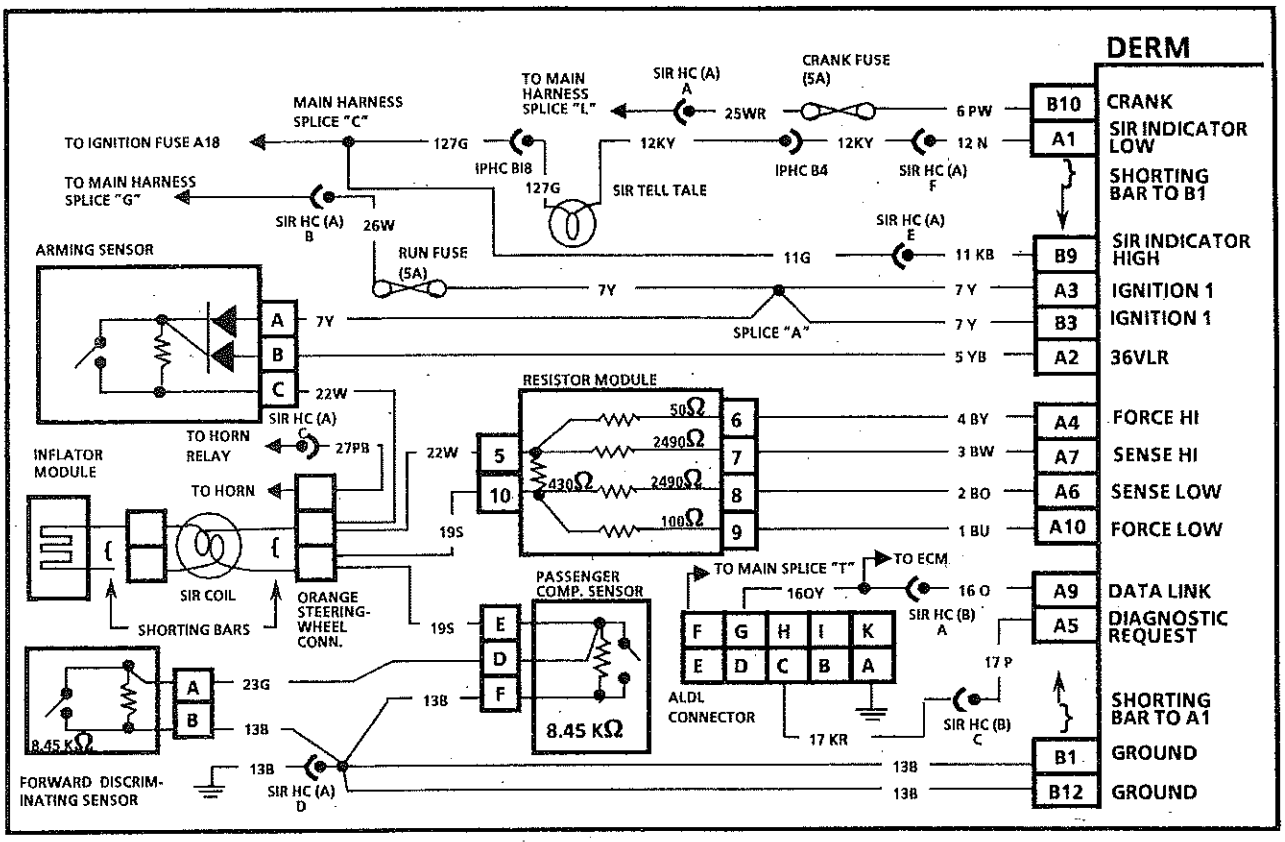

CHART F

SIR TELL TALE BLINKS 7 TO 9 TIMES AND THEN FLASHES CODE 12

Description:

When the Ignition Switch is first turned "ON" system voltage is applied through Ignition Fuse A18 to "SIR Indicator High" (B9) and to the SIR tell tale lamp which is connected to "SIR Indicator Low" (A1). The Run Fuse also applies system voltage to the "Ignition 1" inputs (A3 and B3). The DERM responds by blinking the SIR tell tale 7 to 9 times.

When the engine is being cranked system voltage is applied to the DERM at the "CRANK" input. The DERM grounds the lamp circuit until system voltage is removed from the "CRANK" input. This results in a steady SIR tell tale during cranking.

After cranking the DERM will again blink the SIR tell tale 7 to 9 times.

Notes on Fault Tree:

1) Checks the "Diagnostic Request" circuit for voltage at the ALDL connector.
2) Checks if short to ground is in the "Diagnostic Request" circuit or if DERM is faulty.

CAUTION: To avoid deployment when troubleshooting the SIR system, use Digital Volt Ohm Meter (DVOM) T000T1034. DO NOT USE any type of electrical equipment other than those specified in this manual. Never use a non-powered probe type tester. Instructions in this manual must be followed carefully, otherwise personal injury may result.

CHART F

SIR TELL TALE BLINKS 7 TO 9 TIMES AND THEN FLASHES CODE 12

- IGNITION "OFF".
- DISCONNECT 6-WAY SIR HARNESS CONNECTOR (SIR HC (A)).
- DISCONNECT ORANGE 3-WAY STEERING WHEEL CONNECTOR.
- CONNECT SIR LOAD T000T1035 TO THE SIR HARNESS SIDE (CAR SIDE) OF THE ORANGE 3-WAY STEERING WHEEL CONNECTOR.
- RECONNECT 6-WAY SIR HARNESS CONNECTOR (SIR HC (A)).

(1)
- IGNITION SWITCH "ON".
- SET DVOM TO AC VOLTAGE.
- MEASURE THE VOLTAGE TO GROUND FROM TERMINAL "C" OF THE ALDL CONNECTOR.

4 VOLTS OR LESS

(2)
- IGNITION SWITCH "OFF."
- DISCONNECT DERM.
- MEASURE THE RESISTANCE TO GROUND FROM TERMINAL "C" OF ALDL CONNECTOR.

10 OHMS OR LESS

- REPAIR SHORT TO GROUND IN "DIAGNOSTIC REQUEST" CKT 17KR/17P BETWEEN DERM AND ALDL CONNECTOR.
- REFER TO WIRE REPAIR INSTRUCTIONS IN SECTION WB.1-J.
- RECONNECT ALL SIR COMPONENTS.
- REPEAT "SIR DIAGNOSTIC SYSTEM CHECK."

OVER 10 OHMS

- REPLACE DERM.
- RECONNECT ALL SIR COMPONENTS, REPEAT "SIR DIAGNOSTIC SYSTEM CHECK."

OVER 4 VOLTS

- REPLACE DERM.
- RECONNECT ALL SIR COMPONENTS, REPEAT "SIR DIAGNOSTIC SYSTEM CHECK."

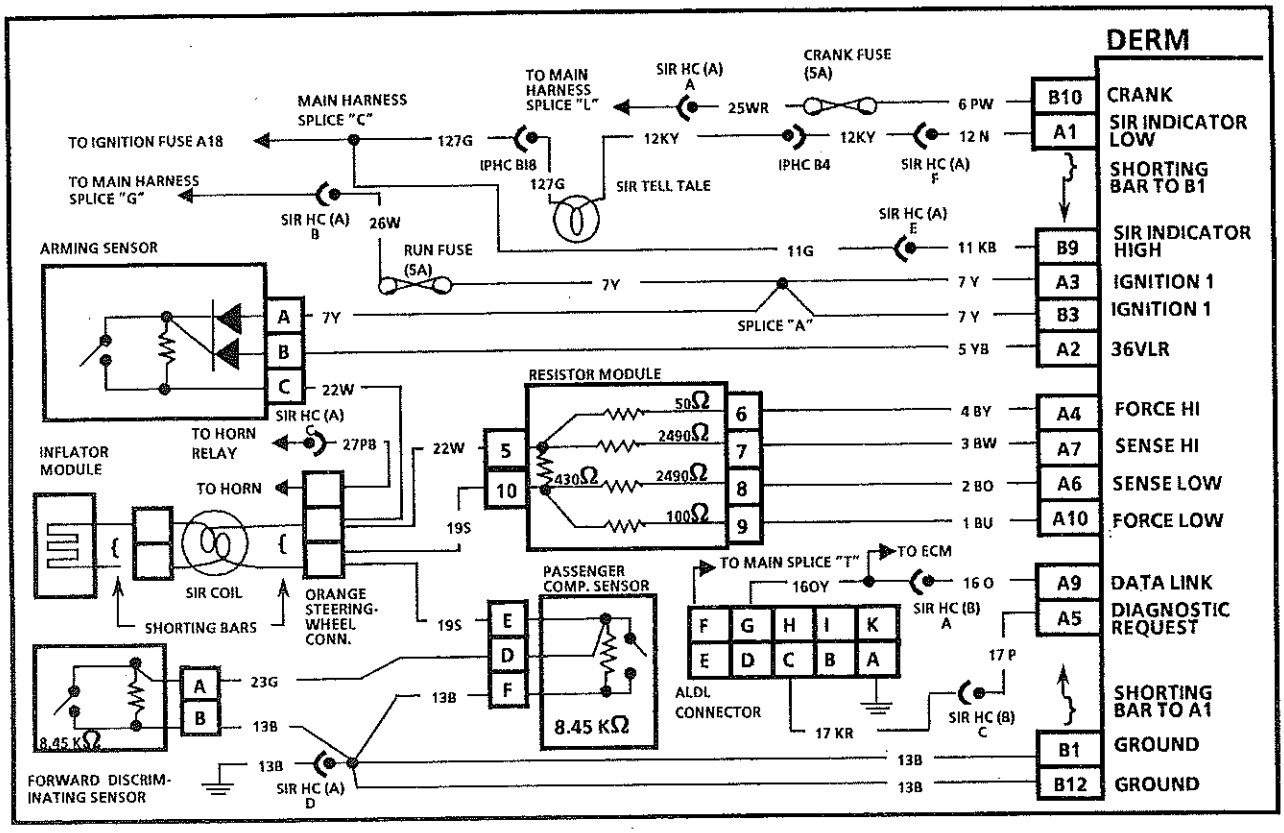

CODE 21 (Page 1of 2)

STEERING COLUMN RESISTANCE TOO HIGH

Test Conditions:

Tested once each ignition cycle during the "Steering Column Resistance Test" if: 1) No faults are detected during "Turn-ON"; 2) No faults are detected during "Continuous Monitoring" for 1 second: 3) No Crank signal present.

Failure Conditions:

Code 21 will set if the combined resistance of the Inflator Module, SIR Coil, harness wiring and connector terminal contact in the steering column is greater than a specified value.

Conditions To Clear:

Current Code 21 will be cleared each time the Ignition Switch is turned "OFF."

Description:

The DERM injects a current of 75 milliamperes through the steering column from the Force Hi output terminal "A4" to the Force Low input terminal "A10".

By monitoring the voltage at the "Sense Hi" input terminal "A7" and the "Sense Low" input terminal "A6" the DERM calculates the combined resistance of the Inflator Module, SIR Coil, harness wiring (CKT's 22W and 19S) and connector terminal contact in the steering column. Code 21 will set if the resistance is greater than a specified value or if the 100 ohm resistor within the Resistor Module is shorted.

Notes on Fault Tree:

1) Checks if 100 ohm resistor in the Resistor Module is shorted.
2) Checks the Resistor Module for internal shorts.
3) Checks the resistance of circuits between the Resistor Module and the DERM.
4) Checks for harness shorts between "Force Hi" and "Sense Hi".
5) Checks for "Sense Hi" shorted to voltage.

CAUTION: To avoid deployment when troubleshooting the SIR system, use Digital Volt Ohm Meter (DVOM) T000T1034. DO NOT USE any type of electrical equipment other than those specified in this manual. Never use a non-powered probe type tester. Instructions in this manual must be followed carefully, otherwise personal injury may result.

CODE 21 (Page 1 of 2)

STEERING COLUMN RESISTANCE TOO HIGH

- WAS THE "SIR DIAGNOSTIC SYSTEM CHECK" PERFORMED?

YES

- IGNITION "OFF".
- DISCONNECT 6-WAY SIR HARNESS CONNECTOR (SIR HC (A)).
- DISCONNECT ORANGE 3-WAY STEERING WHEEL CONNECTOR.
- CONNECT SIR LOAD T000T1035 TO THE SIR HARNESS SIDE (CAR SIDE) OF THE ORANGE 3-WAY STEERING WHEEL CONNECTOR.
- RECONNECT 6-WAY SIR HARNESS CONNECTOR (SIR HC (A)).

NO

- RETURN TO THE "SIR DIAGNOSTIC SYSTEM CHECK."

IS CODE 22 ALSO CURRENT?

YES → GO TO CODE 21 AND 22 BOTH CURRENT CHART.

NO

RESISTOR MODULE CONN. MATING FACE

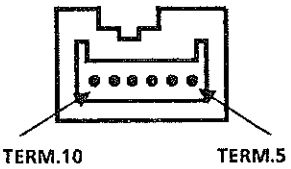

(1)
- IGNITION SWITCH "OFF."
- DISCONNECT RESISTOR MODUL.
- MEASURE RESISTANCE OF RESISTOR MODULE FROM TERMINAL "9" TO "10". (SET DVOM ON 200 OHMS SCALE).

95 TO 105 OHMS

(2)
- MEASURE RESISTANCE OF RESISTOR MODULE FROM TERMINAL "6" TO "7" (SET DVOM ON 20 KOHMS SCALE).

NOT ABOVE 2.5 KOHMS

NOT 95 TO 105 OHMS

- REPLACE RESISTOR MODULE, REFER TO SECTION WB.3-D.
- RECONNECT ALL SIR SYSTEM COMPONENTS, CLEAR SIR CODES.
- REPEAT "SIR DIAGNOSTIC SYSTEM CHECK."

ABOVE 2.5 KOHMS

(3)
- DISCONNECT DERM.
- MEASURE RESISTANCE AT THE RESISTOR MODULE HARNESS CONNECTOR FROM TERMINAL "5" TO "10."

5 OHMS OR LESS

(4)
- CHECK FOR CONTINUITY FROM DERM CONNECTOR TERMINAL "A4" TO " A7".

ABOVE 5 OHMS

- GO TO CODE 21 CHART 2 (PAGE 2 OF 2).

NO CONTINUITY

(5)
- RECONNECT DERM.
- IGNITION SWITCH "ON."
- MEASURE VOLTAGE FROM RESISTOR MODULE HARNESS CONN. TERMINAL "7" TO GROUND.

NOT SYSTEM VOLTAGE

- REPLACE DERM, REFER TO SECTION WB.3-E.
- RECONNECT ALL SIR SYSTEM COMPONENTS.
- REPEAT "SIR DIAGNOSTIC SYSTEM CHECK."

SYSTEM VOLTAGE

- REPAIR SHORT TO VOLTAGE ON CKT 3BW.
- REFER TO INSTRUCTIONS IN SECTION WB.1-J.
- RECONNECT ALL SIR SYSTEM COMPONENTS, CLEAR SIR CODES.
- REPEAT "SIR DIAGNOSTIC SYSTEM CHECK."

CONTINUITY

- REPAIR SHORT FROM CKT 4BY TO 3BW.
- REFER TO WIRE REPAIR INSTRUCTIONS IN SECTION WB.1-J.
- RECONNECT ALL SIR SYSTEM COMPONENTS.
- CLEAR SIR CODES.
- REPEAT "SIR DIAGNOSTIC SYSTEM CHECK."

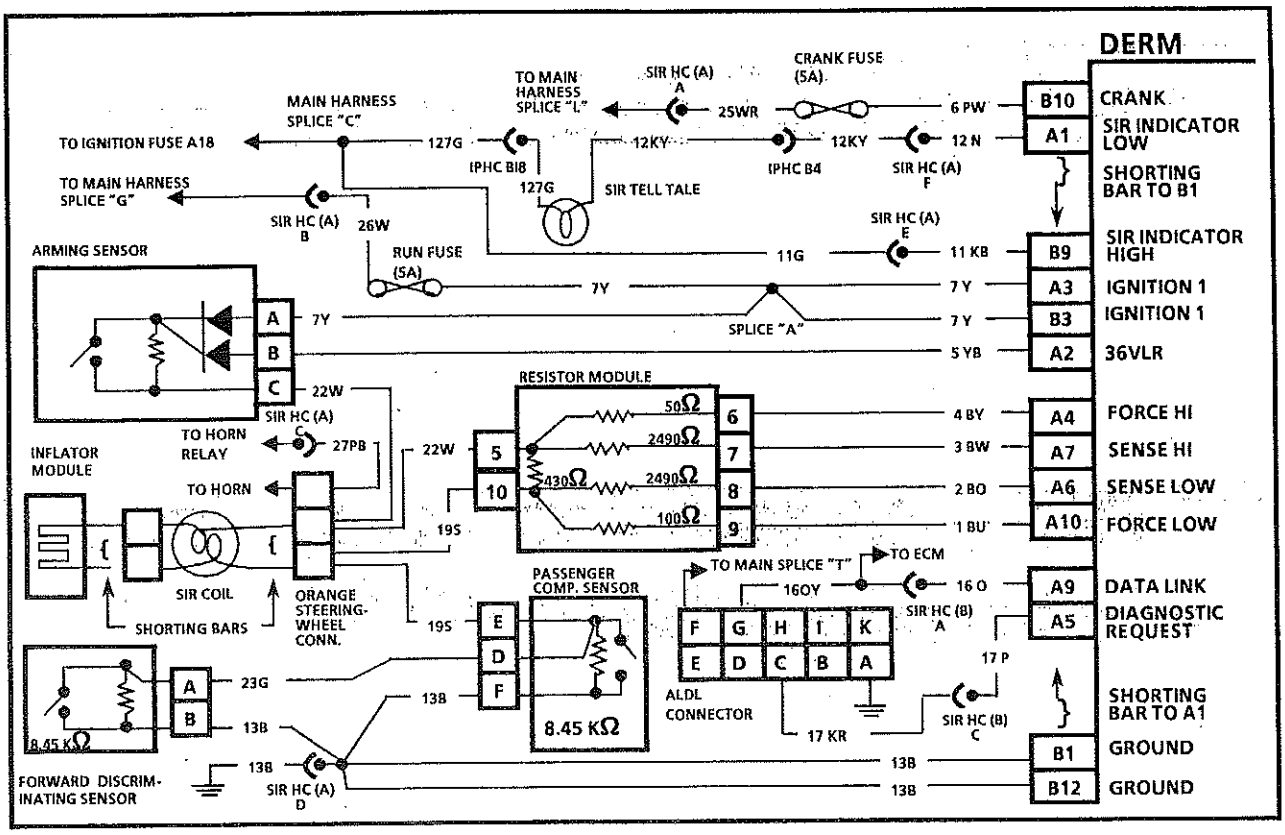

CODE 21 (Page 2 of 2)

STEERING COLUMN RESISTANCE TOO HIGH

Test Conditions:

Tested once each ignition cycle during the "Steering Column Resistance Test" if: 1) No faults are detected during "Turn-ON"; 2) No faults are detected during "Continuous Monitoring" for 1 second: 3) No Crank signal present.

Failure Conditions:

Code 21 will set if the combined resistance of the Inflator Module, SIR Coil, harness wiring and connector terminal contact in the steering column is greater than a specified value.

Conditions To Clear:

Current Code 21 will be cleared each time the Ignition Switch is turned "OFF."

Description:

The DERM injects a current of 75 milliamperes through the steering column from the "Force Hi" output terminal "A4" to the "Force Low" input terminal "A10".

By monitoring the voltage at the "Sense Hi" input terminal "A7" and the "Sense Low" input terminal "A6" the DERM calculates the combined resistance of the Inflator Module, SIR Coil, harness wiring (CKTs 22W and 19S) and connector terminal contact in the steering column. Code 21 will set if the resistance is greater than a specified value or if the 100 ohm resistor within the Resistor Module is shorted.

CAUTION: To avoid deployment when troubleshooting the SIR system, use Digital Volt Ohm Meter (DVOM) T000T1034. DO NOT USE any type of electrical equipment other than those specified in this manual. Never use a non-powered probe type tester. Instructions in this manual must be followed carefully, otherwise personal injury may result.

CODE 21
(Page 2 of 2)
STEERING COLUMN RESISTANCE TOO HIGH

- WERE YOU SENT HERE FROM CODE 21 (PAGE 1 OF 2).

YES

- DISCONNECT SIR LOAD TESTER.
- CHECK FOR CONTINUITY FROM RESISTOR MODULE HARNESS CONNECTOR TERMINAL "5 "TO 3-WAY ORANGE STEERING COLUMN CONNECTOR TERMINAL CKT 22W.

CONTINUITY

- REPAIR OPEN IN CIRCUIT 19S BETWEEN RESISTOR MODULE AND 3-WAY ORANGE STEERING COLUMN CONNECTOR.
- REFER TO WIRE REPAIR INSTRUCTIONS IN SECTION WB.1-J.
- RECONNECT ALL SIR SYSTEM COMPONENTS, CLEAR SIR CODES.
- REPEAT "SIR DIAGNOSTIC SYSTEM CHECK."

NO CONTINUITY

- REPAIR OPEN IN CKT 22W BETWEEN RESISTOR MODULE AND 3-WAY ORANGE STEERING COLUMN CONNECTOR.
- REFER TO WIRE REPAIR INSTRUCTIONS IN SECTION WB.1-J.
- RECONNECT ALL SIR SYSTEM COMPONENTS, CLEAR SIR CODES.
- REPEAT "SIR DIAGNOSTIC SYSTEM CHECK."

NO

- RETURN TO CODE 21 (PAGE 1 OF 2)

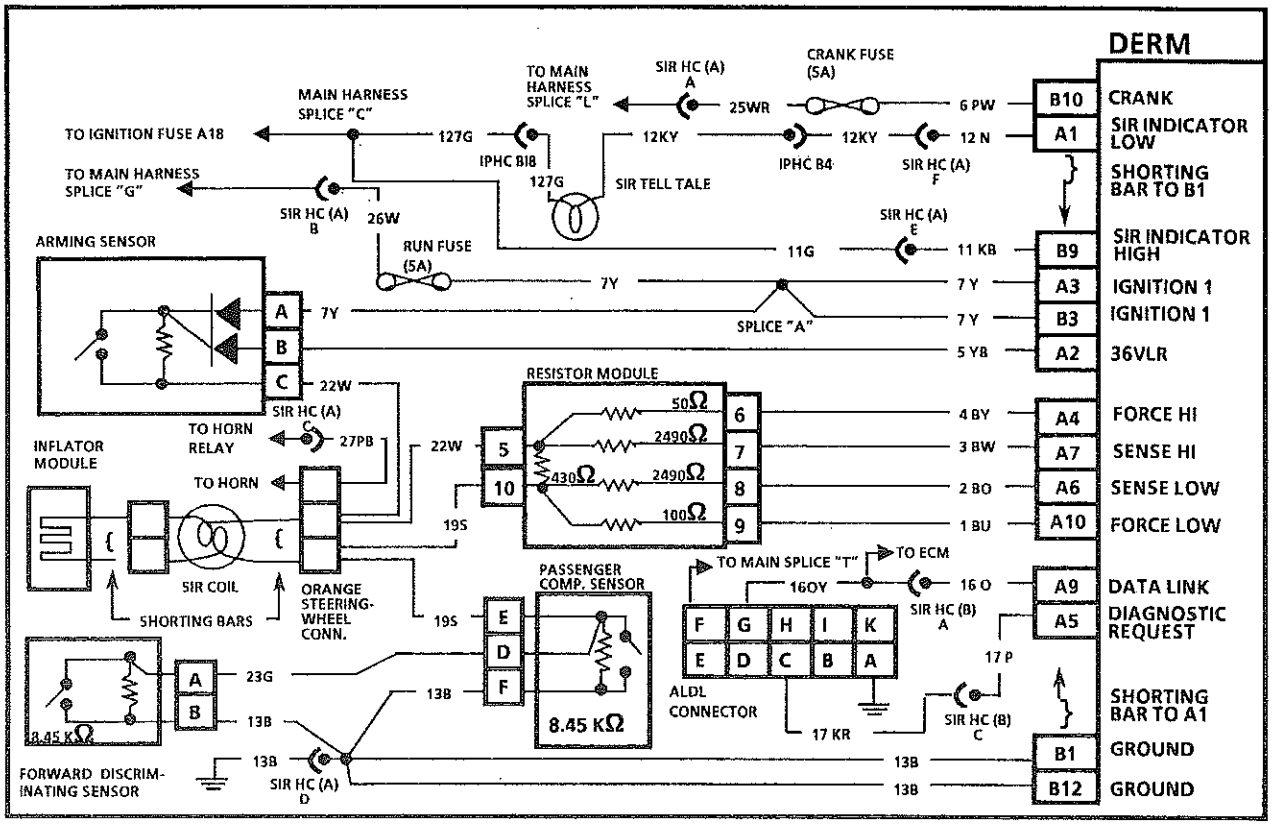

CODE 21 AND 22 BOTH CURRENT

STEERING COLUMN RESISTANCE TOO LOW

Test Conditions:

Tested once each ignition cycle during the "Steering Column Resistance Test" if: 1) No faults are detected during "Turn-ON"; 2) No faults are detected during "Continuous Monitoring" for 1 second: 3) No Crank signal present.

Failure Conditions:

Code 21 and 22 will set if the voltage at the "Sense Low" input terminal "A6" is less than 5 volts during the first portion of the steering column resistance test. This will occur when the "Force Hi" output terminal "A4" is open and results in an undetermined steering column resistance.

Conditions To Clear:

Current Code 21 and 22 will be cleared each time the Ignition Switch is turned "OFF."

Description:

The DERM injects a current of 75 milliamperes through the steering column from the "Force Hi" output terminal "A4" to the "Force Low" input terminal "A10". By monitoring the voltage at the "Sense Hi" input terminal "A7" and the "Sense Low" input terminal "A6" the DERM calculates the combined resistance of the Inflator Module, SIR Coil, harness wiring and connector terminal contact in the steering column. Code 22 and 21 will set if the "Force Hi" output terminal "A4" is open.

Notes on Fault Tree:

1) Checks for open "Force Hi" CKT 4BY.
2) Checks for open 50 ohm resistor in Resistor Module.
3) Checks for proper values in Resistor Module.
4) Checks for short in Resistor Module wiring harness.

CAUTION: To avoid deployment when troubleshooting the SIR system, use Digital Volt Ohm Meter (DVOM) T000T1034. DO NOT USE any type of electrical equipment other than those specified in this manual. Never use a non-powered probe type tester. Instructions in this manual must be followed carefully, otherwise personal injury may result.

CODE 21 AND 22 BOTH CURRENT

STEERING COLUMN RESISTANCE TOO LOW

WAS THE "SIR DIAGNOSTIC SYSTEM CHECK" PERFORMED?

YES

- IGNITION "OFF".
- DISCONNECT 6-WAY SIR HARNESS CONNECTOR (SIR HC (A)).
- DISCONNECT ORANGE 3-WAY STEERING WHEEL CONNECTOR.
- CONNECT SIR LOAD T000T1035 TO THE SIR HARNESS SIDE (CAR SIDE) OF THE ORANGE 3-WAY STEERING WHEEL CONNECTOR.
- RECONNECT 6-WAY SIR HARNESS CONNECTOR (SIR HC (A)).

NO

- RETURN TO "SIR DIAGNOSTIC SYSTEM CHECK."

RESISTOR MODULE CONN.
MATING FACE

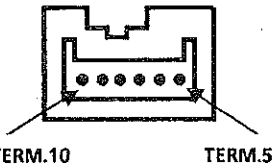

(1)

- DISCONNECT DERM.
- DISCONNECT RESISTOR MODULE.
- CHECK CONTINUITY FROM DERM HARNESS CONNECTOR TERMINAL "A4" TO RESISTOR MODULE HARNESS CONNECTOR TERMINAL "6".

CONTINUITY

(2)

- CHECK RESISTANCE OF RESISTOR MODULE FROM TERMINAL "5" TO "6".

NO CONTINUITY

- REPAIR OPEN IN CKT 4BY.
- REFER TO WIRE REPAIR INSTRUCTIONS IN SECTION WB.1-J.
- RECONNECT ALL SIR SYSTEM COMPONENTS, CLEAR SIR CODES.
- REPEAT "SIR DIAGNOSTIC SYSTEM CHECK."

48 OR 52 OHM

(3)

- MEASURE RESISTANCE FROM RESISTOR MODULE TERMINAL "8" TO "9."

NOT 48 TO 52 OHMS

- REPLACE RESISTOR MODULE, REFER TO SECTION WB.3-D.
- RECONNECT ALL SIR SYSTEM COMPONENTS, CLEAR SIR CODES.
- REPEAT "SIR DIAGNOSTIC SYSTEM CHECK."

GREATER THAN 2.56 KOHM

(4)

- CHECK FOR CONTINUITY AT RESISTOR MODULE HARNESS CONNECTOR BETWEEN TERMINALS
  - "9" AND "10" (CKT 19S AND 1BU)
  - "8" AND "9" (CKT 2BO AND 1BU)
  - "5" AND "9" (CKT 22W AND 1BU)
  - "6" AND "9" (CKT 4BY AND 1BU).

NOT GREATER THAN 2.56 KOHM

- REPLACE RESISTOR MODULE, REFER TO SECTION WB.3-D.
- RECONNECT ALL SIR SYSTEM COMPONENTS, CLEAR SIR CODES.
- REPEAT "SIR DIAGNOSTIC SYSTEM CHECK."

NO CONTINUITY

- REPLACE DERM, REFER TO SECTION WB.3-E.
- RECONNECT ALL SIR SYSTEM COMPONENTS, CLEAR SIR CODES.
- REPEAT "SIR DIAGNOSTIC SYSTEM CHECK."

CONTINUITY

- REPAIR SHORT IN CKT THAT HAD CONTINUITY.
- REFER TO WIRE REPAIR INSTRUCTION IN SECTION WB.1-J.
- RECONNECT ALL SIR SYSTEM COMPONENTS, CLEAR SIR CODES.
- REPEAT "SIR DIAGNOSTIC SYSTEM CHECK".

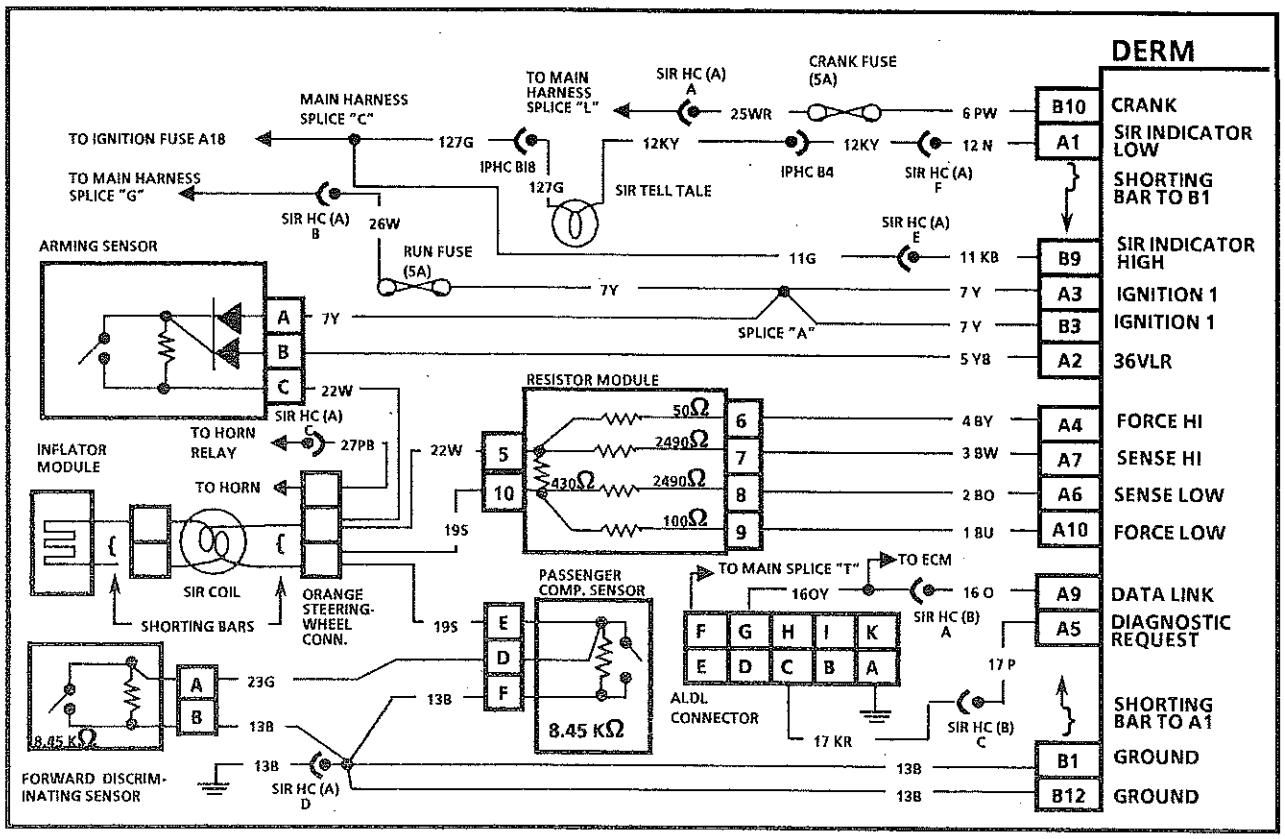

CODE 22 (Page 1 of 2)

STEERING COLUMN RESISTANCE TOO LOW

Test Conditions:

Tested once each ignition cycle during the "Steering Column Resistance Test" if: 1) No faults are detected during "Turn-ON"; 2) No faults are detected during "Continuous Monitoring" for 1 second: 3) No Crank signal present.

Failure Conditions:

Code 22 will set if the combined resistance of the Inflator Module, SIR Coil, harness wiring and connector terminal contact in the steering column is less than a specified value.

Conditions To Clear:

Current Code 22 will be cleared each time the Ignition Switch is turned "OFF."

Description:

The DERM injects a current of 75 milliamperes through the steering column from the "Force Hi" output terminal "A4" to the "Force Low" input terminal "A10". By monitoring the voltage at the "Sense Hi" input terminal "A7" and the "Sense Low" input terminal "A6" the DERM calculates the combined resistance of the Inflator Module, SIR Coil, harness wiring (CKTs 22W and 19S) and connector terminal contact in the steering column. Code 22 will set if:

- The steering column resistance is less than a specified value.
- The 430 ohm resistor in the Resistor Module is shorted.
- The resistance of the 100 ohm resistor in the Resistor Module is too high.
- The high side of the deployment loop is shorted to the low side of the deployment loop.

Notes on Fault Tree:

1) Checks if fault is in steering column. The SIR Load Tester simulates the resistance of good steering column wiring and components.
2) Determines if fault is in Inflator Module or in the SIR Coil. The SIR Load Tester simulates the resistance of a good Inflator Module.
3) Determines if fault is on deployment loop side or DERM side of Resistor Module.
4) Checks for open in "Sense Hi" CKT 3BW.

CAUTION: To avoid deployment when troubleshooting the SIR system, use Digital Volt Ohm Meter (DVOM) T000T1034. DO NOT USE any type of electrical equipment other than those specified in this manual. Never use a non-powered probe type tester. Instructions in this manual must be followed carefully, otherwise personal injury may result.

CODE 22 (Page 1 of 2)

STEERING COLUMN RESISTANCE TOO LOW

WAS THE "SIR DIAGNOSTIC SYSTEM CHECK" PERFORMED?

YES

- IGNITION "OFF".
- DISCONNECT 6-WAY SIR HARNESS CONNECTOR (SIR HC (A)).
- DISCONNECT ORANGE 3-WAY STEERING WHEEL CONNECTOR.
- CONNECT SIR LOAD T000T1035 TO THE SIR HARNESS SIDE (CAR SIDE) OF THE ORANGE 3-WAY STEERING WHEEL CONNECTOR.
- RECONNECT 6-WAY SIR HARNESS CONNECTOR (SIR HC (A)).

NO

- RETURN TO THE "SIR DIAGNOSTIC SYSTEM CHECK."

IS CODE 21 ALSO CURRENT?

NO

(1)
- TURN IGNITION SWITCH "ON."
- WAIT 20 SECONDS.
- IS CODE 22 CURRENT?

YES

GO TO CODE 21 AND 22 BOTH CURRENT CHART.

RESISTOR MODULE CONN.
MATING FACE

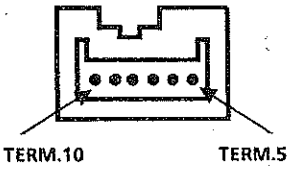

YES

(3)
- IGNITION SWITCH "OFF."
- DISCONNECT SIR LOAD TESTER T000T1035.
- DISCONNECT 6-WAY SIR HARNESS CONNECTOR (SIR HC (A)).
- DISCONNECT DERM.
- MEASURE RESISTANCE ON SIR HARNESS SIDE (CAR SIDE) OF ORANGE 3-WAY STEERING WHEEL CONNECTOR BETWEEN TERMINALS 22W AND 19S.

NOT LESS THAN 408 OHMS

(4)
- DISCONNECT RESISTOR MODULE.
- CHECK FOR CONTINUITY FROM DERM HARNESS CONNECTOR TERMINAL "A7" TO RESISTOR MODULE HARNESS CONNECTOR TERMINAL "7".

CONTINUITY

- MEASURE RESISTANCE OF RESISTOR MODULE FROM TERMINAL "5" TO "7".

NOT 2460 TO 2520 OHMS

- REPLACE RESISTOR MODULE.
- RECONNECT ALL SIR SYSTEM COMPONENTS, CLEAR SIR CODES.
- REPEAT "SIR DIAGNOSTIC SYSTEM CHECK."

2460 TO 2520 OHMS

- REPLACE DERM, REFER TO SECTION WB-3-E.
- RECONNECT ALL SIR SYSTEM COMPONENTS, CLEAR SIR CODES.
- REPEAT "SIR DIAGNOSTIC SYSTEM CHECK."

NO CONTINUITY

- REPAIR OPEN IN CKT 3BW.
- REFER TO WIRE REPAIR INSTRUCTIONS IN SECTION WB.1-J.
- RECONNECT ALL SIR SYSTEM COMPONENTS, CLEAR SIR CODES.
- REPEAT "SIR DIAGNOSTIC SYSTEM CHECK."

LESS THAN 408 OHMS

GO TO CODE 22 (PAGE 2 OF 2)

NO

(2)
- IGNITION SWITCH "OFF."
- DISCONNECT SIR LOAD T000T1035 AT THE CAR SIDE OF THE ORANGE 3-WAY STEERING WHEEL CONNECTOR.
- DISCONNECT ORANGE 2-WAY CONNECTOR AT INFLATOR MODUL.
- CONNECT SIR LOAD T000T1035 TO THE CAR SIDE OF THE ORANGE 2-WAY CONNECTOR.
- CONNECT ORANGE 3-WAY STEERING WHEEL CONNECTOR.
- TURN IGNITION SWITCH "ON."
- WAIT 20 SECONDS.
- IS CODE 22 CURRENT?

YES

- REPLACE SIR COIL, REFER TO SECTION WB.3-K.
- RECONNECT ALL SIR SYSTEM COMPONENTS, CLEAR SIR CODES.
- REPEAT "SIR DIAGNOSTIC SYSTEM CHECK."

NO

- REPLACE INFLATOR MODULE, REFER TO SECTION WB.3-I.
- RECONNECT ALL SIR SYSTEM COMPONENTS, CLEAR SIR CODES.
- REPEAT "SIR DIAGNOSTIC SYSTEM CHECK."

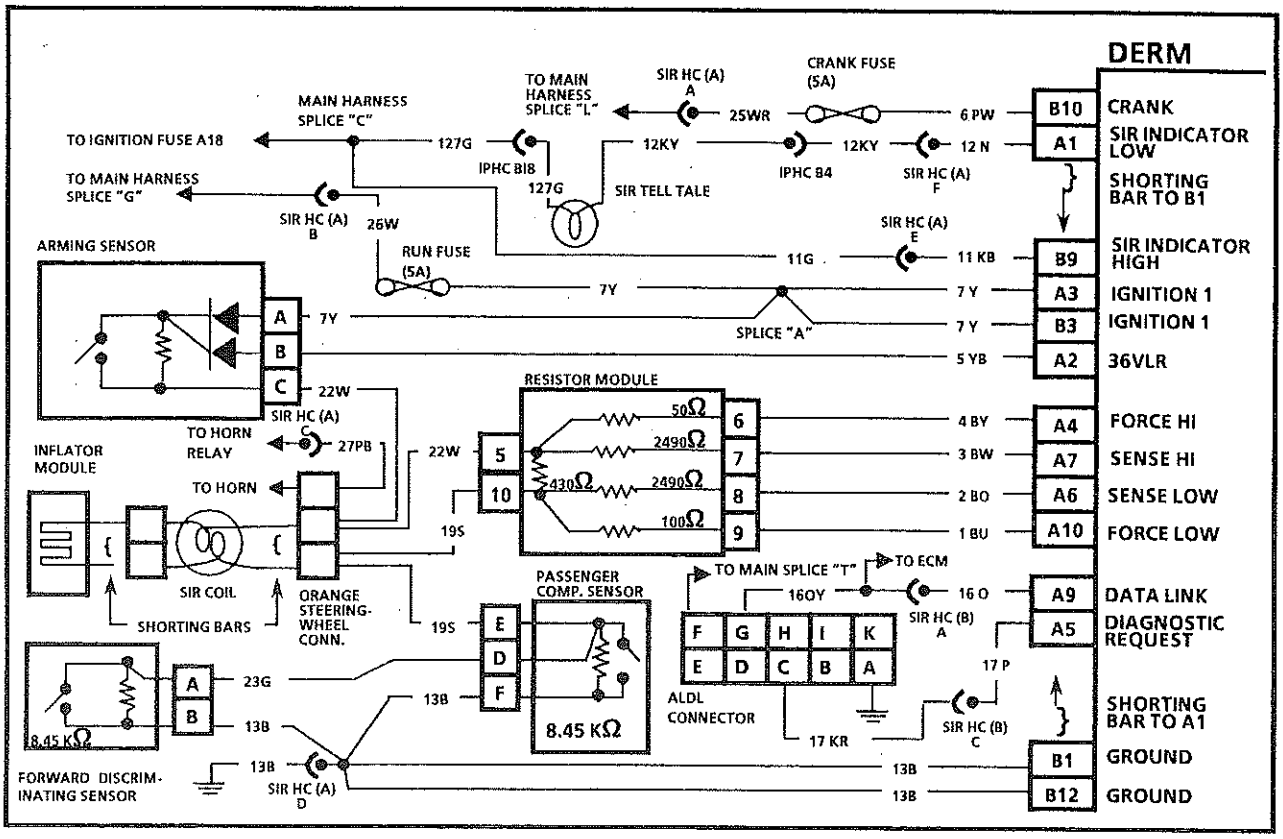

CODE 22 (Page 2 of 2)

STEERING COLUMN RESISTANCE TOO LOW

Test Conditions:

Tested once each ignition cycle during the "Steering Column Resistance Test" if: 1) No faults are detected during "Turn-ON"; 2) No faults are detected during "Continuous Monitoring" for 1 second: 3) No Crank signal present.

Failure Conditions:

Code 22 will set if the combined resistance of the Inflator Module, SIR Coil, harness wiring and connector terminal contact in the steering column is less than a specified value ohms.

Conditions To Clear:

Current Code 22 will be cleared each time the Ignition Switch is turned "OFF."

Description:

The DERM injects a current of 75 milliamperes through the steering column from the "Force Hi" output terminal "A4" to the "Force Low" input terminal "A10."

By monitoring the voltage at the "Sense Hi" input terminal "A7" and the "Sense Low" input terminal "A6" the DERM calculates the combined resistance of the Inflator Module, SIR Coil, harness wiring (CKTs 22W and 19S) and connector terminal contact in the steering column. Code 22 will set if:

- The steering column resistance is less than a specified value ohms.
- The 430 ohm resistor in the Resistor Module is shorted.
- The resistance of the 100 ohm resistor in the Resistor Module is too high.
- The high side of the deployment loop is shorted to the low side of the deployment loop.

Notes on Fault Tree:

1) Determines if Resistor Module is defective or if problem is a short in wiring.

CAUTION: To avoid deployment when troubleshooting the SIR system, use Digital Volt Ohm Meter (DVOM) T000T1034. DO NOT USE any type of electrical equipment other than those specified in this manual. Never use a non-powered probe type tester. Instructions in this manual must be followed carefully, otherwise personal injury may result.

CODE 22

(Page 2 of 2)

STEERING COLUMN RESISTANCE TOO LOW

WERE YOU SENT HERE FROM CODE 22 (PAGE 1 OF 2).

YES

(1)

- DISCONNECT RESISTOR MODULE.
- CHECK FOR CONTINUITY AT RESISTOR MODULE HARNESS CONNECTOR BETWEEN TERMINALS
  - "10" AND "5" (CKT 19S AND 22W)
  - "10" AND "7" (CKT 19S AND 3BW)
  - "10" AND "6" (CKT 19S AND 4BY)
  - "8" AND "5" (CKT 2BO AND 22W)
  - "8" AND "7" (CKT 2BO AND 3BW)
  - "9" AND "7" (CKT 1BU AND 3BW).

CONTINUITY

- REPAIR SHORT IN CKT THAT HAD CONTINUITY.
- REFER TO WIRING INSTRUCTIONS IN SECTION WB.1-J.
- RECONNECT ALL SIR SYSTEM COMPONENTS, CLEAR SIR CODES.
- REPEAT "SIR DIAGNOSTIC SYSTEM CHECK".

NO CONTINUITY

- REPLACE RESISTOR MODULE, REFER TO SECTION WB.3-D.
- RECONNECT ALL SIR SYSTEM COMPONENTS, CLEAR SIR CODES.
- REPEAT "SIR DIAGNOSTIC SYSTEM CHECK."

NO

- RETURN TO CODE 22 (PAGE 1 OF 2)

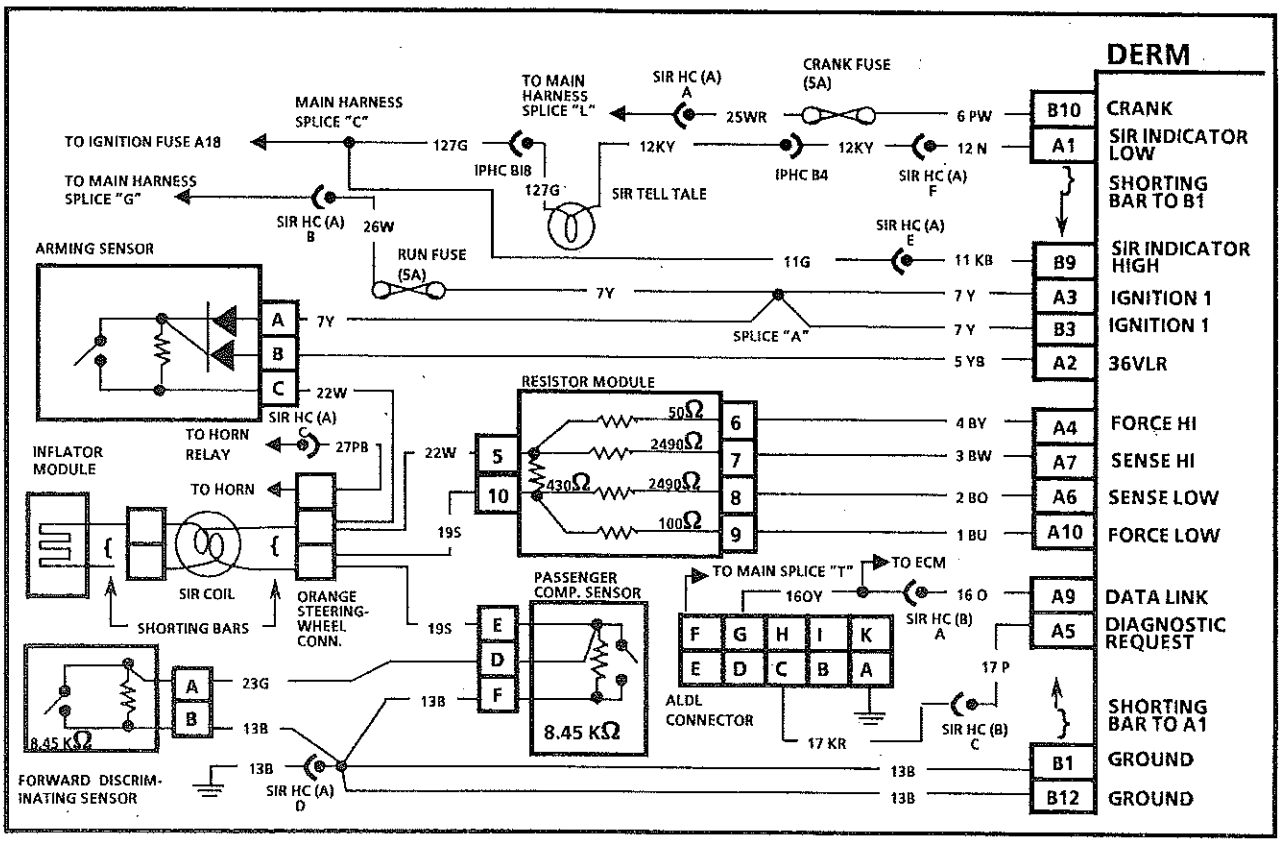

CODE 23 (Page 1 of 2)

STEERING COLUMN VOLTAGE TOO HIGH

Test Conditions:

Tested every 100 milliseconds during "Continuous Monitoring".

Failure Conditions:

Code 23 will set if the voltage at the "Sense Low" input terminal "A6" is greater than 78% of 36VLR output voltage for 55 milliseconds.

Conditions To Clear:

Current Code 23 will clear if the voltage at the "Sense Low" input terminal "A6" is between 41% and 61% of 36VLR output voltage for 500 milliseconds (5 consecutive "Continuous Monitoring" cycles) after Code 23 has been set.

Description:

Code 23 is set when the voltage at the "Sense Low" input terminal "A6" is greater than 78% of 36VLR output voltage for 500 milliseconds during the "Continuous Monitoring" tests performed by the DERM. The "Continuous Monitoring" tests are performed by the DERM after the initial "Turn-ON" tests are completed and are performed every 100 milliseconds while Ignition 1 voltage is present at the DERM. The "Continuous Monitoring" tests check the continuity of the deployment loop from the 36VLR output of the DERM through the Arming Sensor, Inflator Module and the Discriminating Sensors to ground. Code 23 indicates a shorted Arming Sensor, shorted harness, or open grounds on both Discriminating Sensors. An open CKT 19S between steering wheel connector and passenger compartment sensor sets Code 23.

Notes on Fault Tree:

1) Checks the 36VLR circuit for a short to CKT 22W or 19S.
2) Checks for shorts between CKT 5YB and CKT 4BY, 2BO or 1BU.

CAUTION: To avoid deployment when troubleshooting the SIR system, use Digital Volt Ohm Meter (DVOM) T000T1034. DO NOT USE any type of electrical equipment other than those specified in this manual. Never use a non-powered probe type tester. Instructions in this manual must be followed carefully, otherwise personal injury may result.

CODE 23

(PAGE 1 OF 2)
STEERING COLUMN VOLTAGE TOO HIGH

WAS THE "SIR DIAGNOSTIC SYSTEM CHECK" PERFORMED?

YES

- IGNITION "OFF".
- DISCONNECT 6-WAY SIR HARNESS CONNECTOR (SIR HC (A)).
- DISCONNECT ORANGE 3-WAY STEERING WHEEL CONNECTOR.
- CONNECT SIR LOAD T000T1035 TO THE SIR HARNESS SIDE (CAR SIDE) OF THE ORANGE 3-WAY STEERING WHEEL CONNECTOR.
- RECONNECT 6-WAY SIR HARNESS CONNECTOR (SIR HC (A)).

NO

- RETURN TO THE "SIR DIAGNOSTIC SYSTEM CHECK."

(1)

- DISCONNECT ARMING SENSOR AND RESISTOR MODULE.
- IGNITION SWITCH "ON."
- MEASURE VOLTAGE FROM TERMINAL "C" OF THE ARMING SENSOR HARNESS CONNECTOR TO GROUND.

LESS THAN 1 VOLT

(2)

- MEASURE VOLTAGE AT RESISTOR MODULE HARNESS CONNECTOR TERMINALS
  - "6" (CKT 4BY)
  - "8" (CKT 2BO)
  - "9" (CKT 1BU)
  TO GROUND

LESS THAN 30 VOLTS

GO TO CODE 23 (PAGE 2 OF 2)

30 VOLTS OR MORE

- REPAIR SHORT FROM 36VLR CKT 5YB TO CKT WHICH HAD HIGH VOLTAGE.
- REFER TO WIRE REPAIR INSTRUCTIONS IN SECTION WB.1-J.
- RECONNECT ALL SIR SYSTEM COMPONENTS, CLEAR SIR CODES.
- KEY OFF FOR 10 MINUTES.
- REPEAT "SIR DIAGNOSTIC SYSTEM CHECK".

NOT LESS THAN 1 VOLT

(3)

- DISCONNECT SIR LOAD TESTER.
- MEASURE VOLTAGE FROM TERMINAL "C" OF THE ARMING SENSOR HARNESS CONNECTOR TO GROUND.

LESS THAN 30 VOLTS

- REPAIR SHORT FROM 36VLR CKT 5YB TO CKT 19S.
- REFER TO WIRE REPAIR INSTRUCTIONS IN SECTION WB.1-J.
- RECONNECT ALL SIR SYSTEM COMPONENTS, CLEAR SIR CODES.
- KEY OFF FOR 10 MINUTES.
- REPEAT "SIR DIAGNOSTIC SYSTEM CHECK."

30 VOLTS OR MORE

- REPAIR SHORT FROM 36VLR CKT 5YB TO CKT 22W (CHECK FOR SHORT BETWEEN PINS B & C OF ARMING SENSOR HARNESS CONNECTOR).
- REFER TO WIRE REPAIR INSTRUCTIONS IN SECTION WB.1-J.
- RECONNECT ALL SIR SYSTEM COMPONENTS, CLEAR SIR CODES.
- KEY OFF FOR 10 MINUTES.
- REPEAT "SIR DIAGNOSTIC SYSTEM CHECK".

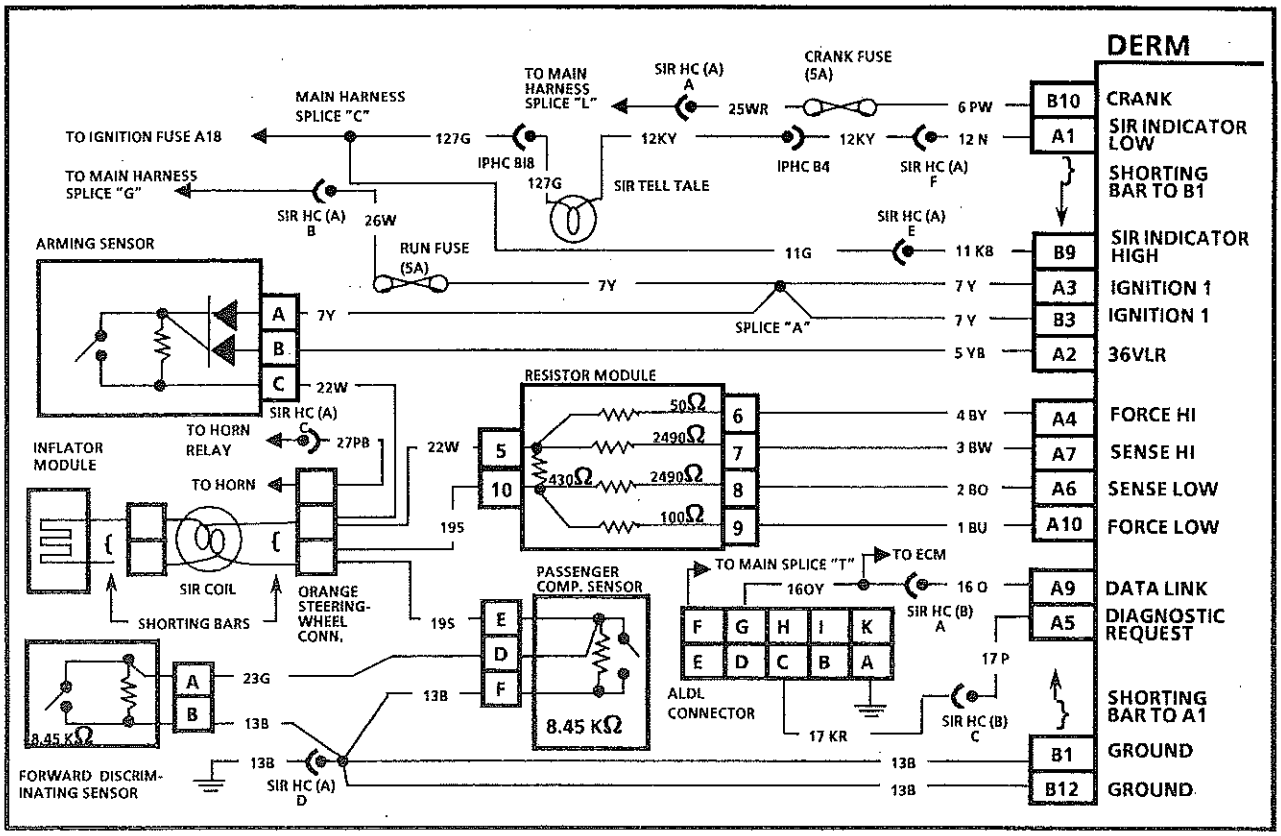

CODE 23 (Page 2 of 2)

STEERING COLUMN VOLTAGE TOO HIGH

Test Conditions:

Tested every 100 milliseconds during "Continuous Monitoring".

Failure Conditions:

Code 23 will set if the voltage at the "Sense Low" input terminal "A6" is greater than 78% of 36VLR output voltage for 55 milliseconds.

Conditions To Clear:

Current Code 23 will clear if the voltage at the "Sense Low" input terminal "A6" is between 41% and 61% of 36VLR output voltage for 500 milliseconds (5 consecutive "Continuous Monitoring" cycles) after Code 23 has been set.

Description:

Code 23 is set when the voltage at the "Sense Low" input terminal "A6" is greater than 78% of 36VLR output voltage for 500 milliseconds during the "Continuous Monitoring" tests performed by the DERM. The "Continuous Monitoring" tests are performed by the DERM after the initial "Turn-ON" tests are completed and are performed every 100 milliseconds while Ignition 1 voltage is present at the DERM. The "Continuous Monitoring" tests check the continuity of the deployment loop from the 36VLR output of the DERM through the Arming Sensor, Inflator Module and the Discriminating Sensors to ground. Code 23 indicates a shorted Arming Sensor, shorted harness, or open grounds on both Discriminating Sensors. An open CKT 19S between steering wheel connector and passenger compartment sensor sets Code 23.

Notes on Fault Tree:

1) An open CKT 19S between the orange steering wheel connector and passenger compartment sensor causes Code 23 also.

CAUTION: To avoid deployment when troubleshooting the SIR system, use Digital Volt Ohm Meter (DVOM) T000T1034. DO NOT USE any type of electrical equipment other than those specified in this manual. Never use a non-powered probe type tester. Instructions in this manual must be followed carefully, otherwise personal injury may result.

CODE 23

(PAGE 2 OF 2)
STEERING COLUMN VOLTAGE TOO HIGH

WERE YOU SENT HERE FROM CODE 23 (PAGE 1 OF 2)?

NO

- RETURN TO CODE 23 (PAGE 1 OF 2).

YES

(1)

- CHECK FOR OPEN CKT 19S BETWEEN ORANGE 3-WAY STEERING WHEEL CONNECTOR AND PASSENGER COMPARTMENT SENSOR TERMINAL "E". IS CKT OK?

NO

- REPAIR CKT 19S .
- REFER TO WIRE REPAIR INSTUCTIONS. SECTION WB.1-J.
- RECONNECT ALL SIR SYSTEM COMPONENTS, CLEAR SIR CODES.
- REPEAT "SIR DIAGNOSTIC SYSTEM CHECK".

YES

- CHECK RESISTANCE OF ARMING SENSOR BETWEEN TERMINALS "B" AND "C". SHOULD BE MORE THAN 3K OHM. IS IT?

NO

- REPLACE ARMING SENSOR
- REFER TO SECTION WB.3-F.
- RECONNECT ALL SIR SYSTEM COMPONENTS, CLEAR SIR CODES.
- REPEAT "SIR DIAGNOSTIC SYSTEM CHECK".

YES

- REPLACE DERM.
- REFER TO SECTION WB. 3-E.
- RECONNECT ALL SIR SYSTEM COMPONENTS, CLEAR SIR CODES.
- REPEAT "SIR DIAGNOSTIC SYSTEM CHECK".

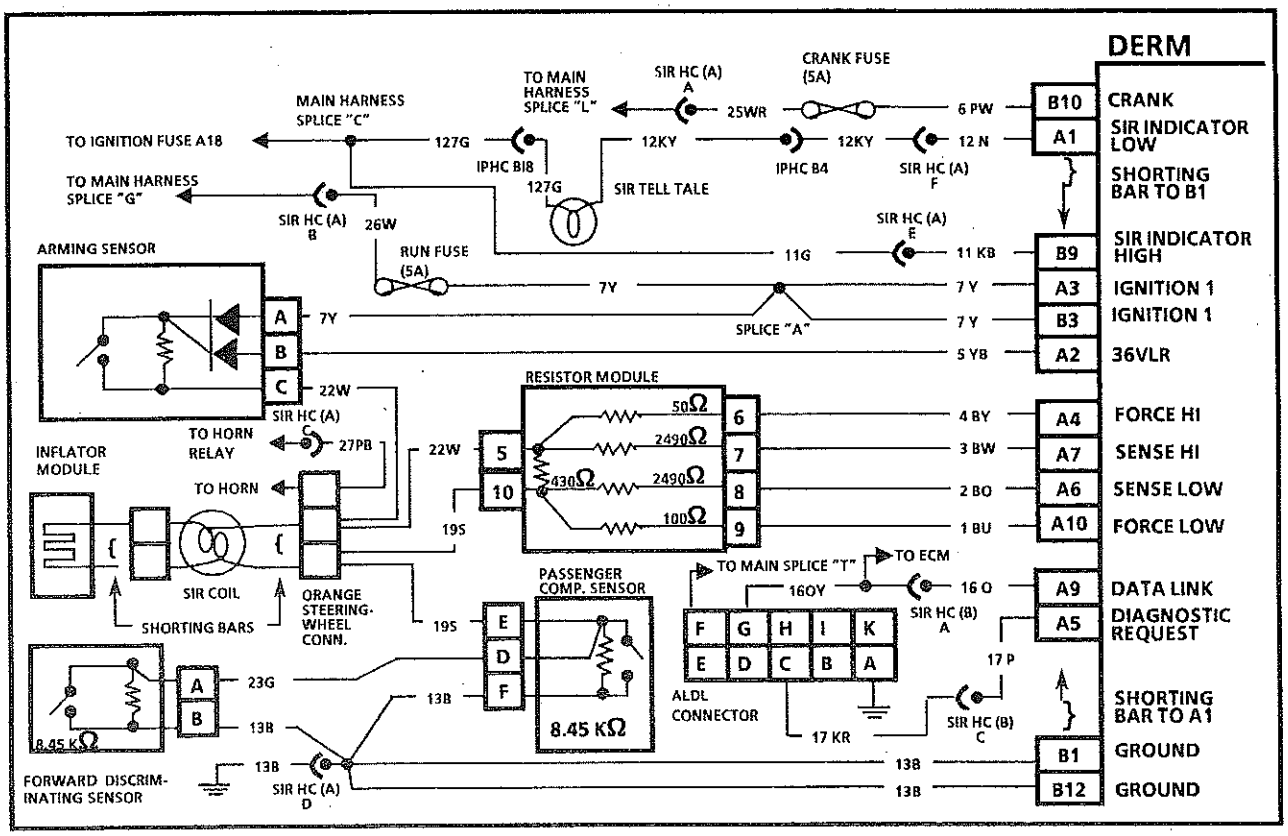

CODE 24 (PAGE 1 OF 2)

STEERING COLUMN VOLTAGE TOO LOW

Test Conditions:

Tested every 100 milliseconds during "Continuous Monitoring".

Failure Conditions:

Code 24 will set if the voltage at the "Sense Low" input terminal "A6" is between 0% and 41% of 36 VLR output voltage for 500 milliseconds.

Conditions To Clear:

Code 24 will clear if the voltage at the "Sense Low" input terminal "A6" is between 41% and 61% of 36VLR output voltage for 500 milliseconds.

Description:

"Continuous Monitoring" tests performed by the DERM. The "Continuous Monitoring" tests are performed by the DERM after the initial "Turn-ON" tests are completed and are performed every 100 milliseconds while Ignition 1 voltage is present at the DERM. The "Continuous Monitoring" tests check the continuity of the deployment loop from the 36VLR output of the DERM through the Arming Sensor, Inflator Module and the Discriminating Sensors to ground. Code 24 will set if the Arming Sensor resistance is too high or open, the Discriminating Sensor resistance is too low or shorted, the "Force Hi", "Sense Hi", "Sense Low" or "Force Low" circuits are shorted to ground or system voltage, the high side of the deployment loop is shorted to the low side.

Notes on Fault Tree:

1) Determines if fault is in SIR Coil.
2) Determines if fault is short to voltage on CKT 22W.