SERVICE NOTES
Section WB Elan

Supplementary Inflatable Restraint (S.I.R.)

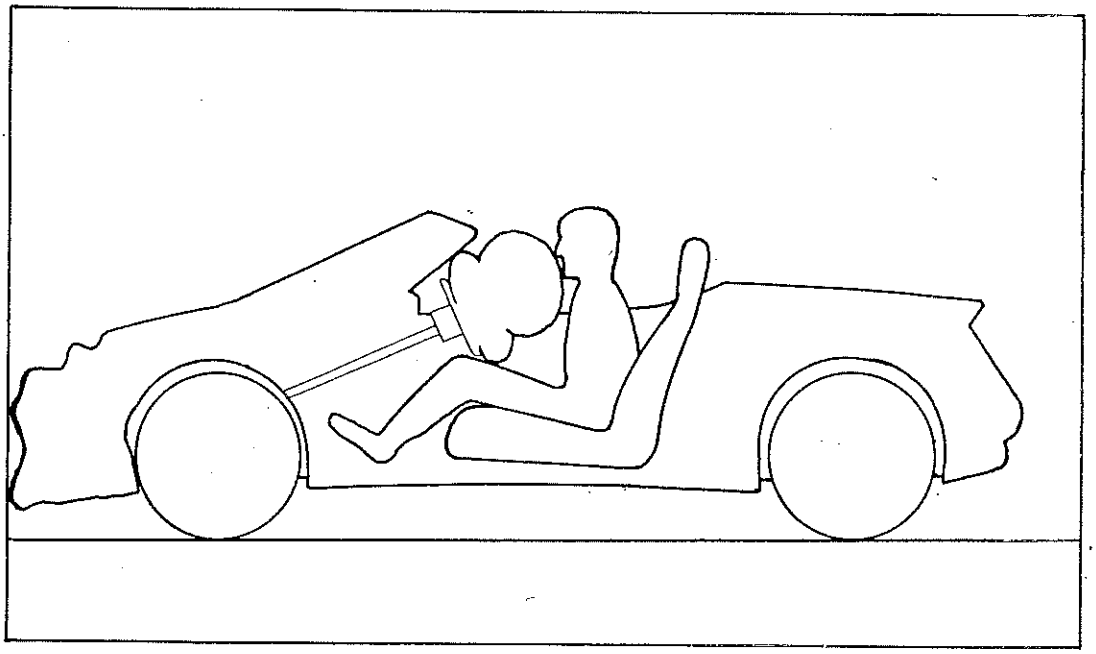

LOTUS CARS LTD
Norwich, Norfolk, England NR14 8EZ Telephone (0953) 608000
Telefax (0953) 606884 Telex 97401

Part No. E100T0327J

© LOTUS CARS LTD 1990

Publication Part Number E100T0327J **© Lotus Cars Ltd. November 1990**

This publication has been designed for use by Lotus dealers familiar with general workshop safety procedures and practices. Take all appropriate action to guard against injury to persons or damage to property.

Lotus policy is one of continuous product improvement and the right is reserved to alter specifications at any time without notice.

Whilst every care has been taken to ensure correctness of information, it is impossible to guarantee complete freedom from errors or omissions, or to accept liability arising from such errors or omissions, but nothing herein contained shall affect your statutory rights.

PASSIVE RESTRAINT

SECTION WB

SUPPLEMENTARY INFLATABLE RESTRAINT (S.I.R.) - ELAN

	Section
Introduction	WB.1
Component Function	WB.2
Component Replacement	WB.3
Fault Diagnosis	WB.4

SECTION WB.1 - INTRODUCTION

	Sub-Section	Page
WA Sections Explained	WB.1 - A	3
General Description	WB.1 - B	3
S.I.R. Tell Tale Lamp	WB.1 - C	3
Assembly Line Diagnostic Link (ALDL)	WB.1 - D	4
Trouble Codes	WB.1 - E	5
'Tech 1' Scanner Tool	WB.1 - F	5
Safety Precautions, Shipping, Storage & Disposal	WB.1 - G	6
Inspections Required After Accident	WB.1 - H	9
Special Tools	WB.1 - I	9
Wiring Repair	WB.1 - J	11
Abbreviations & Definitions	WB.1 - K	11

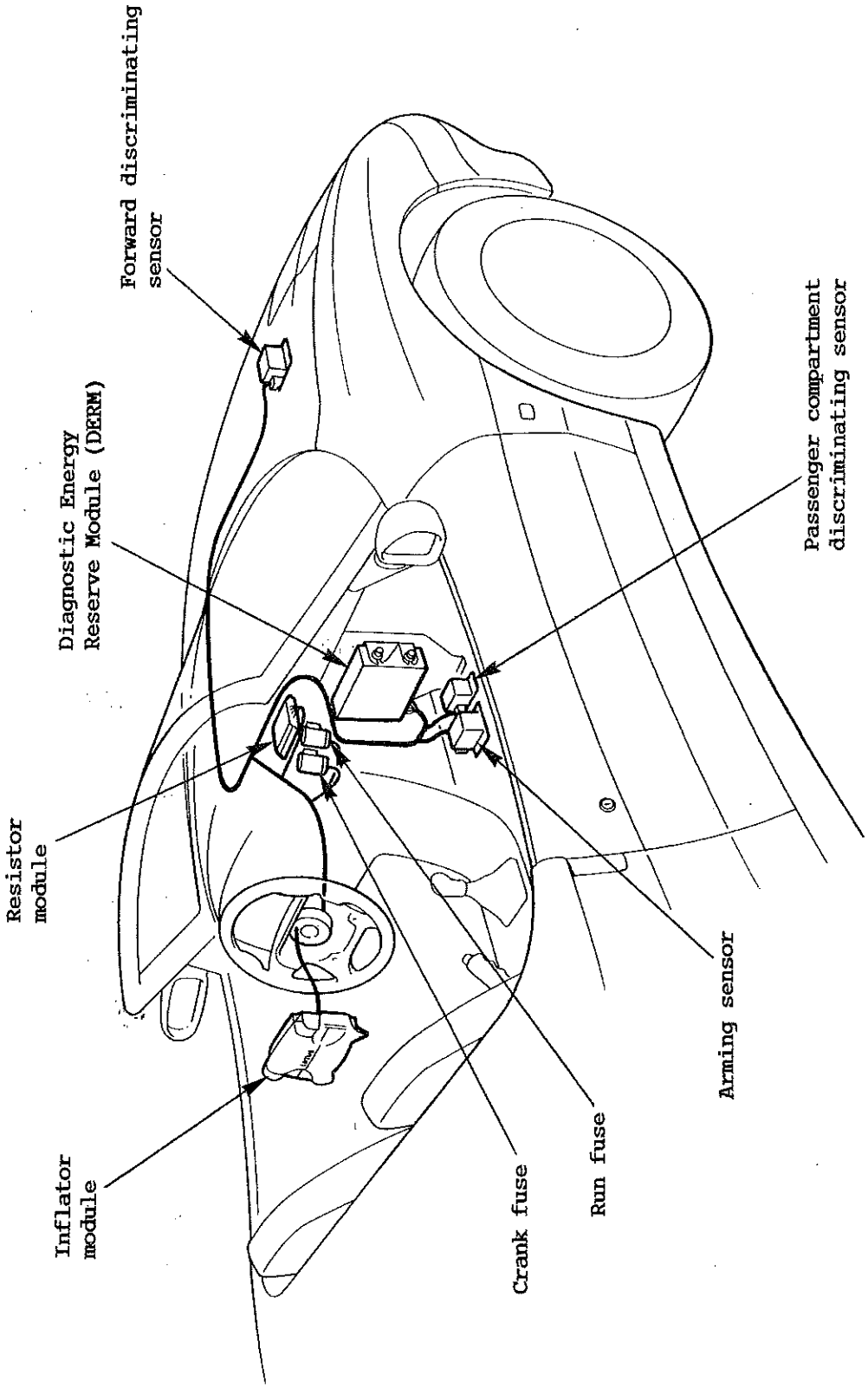
Forward discriminating sensor
Diagnostic Energy Reserve Module (DERM)
Resistor module
Inflator module
Crank fuse
Run fuse
Arming sensor
Passenger compartment discriminating sensor

WB.1 - A WB SECTIONS EXPLAINED

Introduction - WB.1

This section starts with a general overview of the S.I.R. system. The operation of the S.I.R. tell tale lamp is explained as is the concept of the 'trouble code'. The 'Tech 1' scanner tool is introduced and its operation explained, and safety precautions to be taken when working on the car are outlined.

Component Function - WB.2

This section explains the function of each individual component, and where it is fitted in order that a thorough understanding of the operation of the system may be gained.

Component Replacement - WB.3

Safety precautions and procedures are explained for replacing each of the system components.

Fault Diagnosis - WB.4

Diagnosis of system faults using the 'Tech 1' scanner tool.

WB.1 - B GENERAL DESCRIPTION

1991 Model Year onwards Lotus Elans for the USA market, are fitted with a Supplementary Inflatable Restraint (S.I.R.) on the driver's side, to provide driver protection additional to that provided by the seat belt, in the event of a frontal collision. It is strongly recommended that both driver and passenger wear seat belts at all times, no matter how short the journey. In the event of a frontal collision, a driver who is properly restrained by a seat belt, will be in the best possible position for full effectiveness of the S.I.R.

The S.I.R. system is designed to operate when the vehicle is involved in a frontal collision, and the impact (rate of deceleration) as detected by at least two sensors, is great enough to warrant additional driver protection. The 'air bag' is housed in the centre of the steering wheel, and when triggered, inflates in a fraction of a second with nitrogen gas to form a cushion for the driver's upper body. The bag then deflates very rapidly to minimise any obstruction to the driver. Some parts of the system are designed to operate only once, and need replacing with new components before being ready for another deployment. To provide further protection to the driver, and limit leg movement caused by the impact, an energy absorbing knee bolster is fitted to the underside of the fascia on the driver's side. The steering column is collapsible as on cars without SIR.

The system incorporates a self-diagnostic facility, which continuously monitors the SIR electrical circuit for faults, and lights a fascia tell tale lamp if necessary.

WB.1 - C S.I.R. TELL TALE LAMP

A tell tale light on the fascia provides a warning if the S.I.R. self-diagnostic system detects a fault.

As a bulb and circuit check, the tell tale should flash seven to nine times when the ignition is switched on, and then go out. When the engine is cranked, the lamp will come on steady, and then flash for another eight seconds after the engine has started.

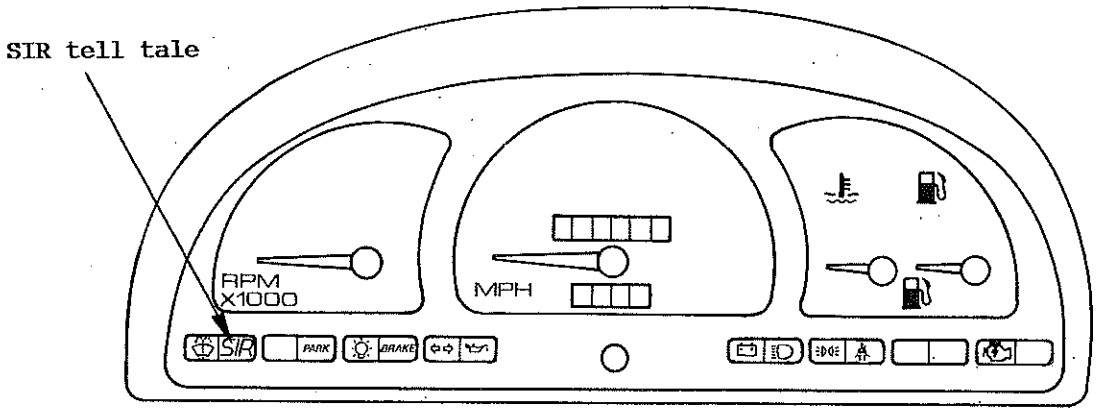

WARNING: - If the S.I.R. tell tale lamp does not come on with the ignition, and follow the sequence detailed above (bulb and circuit check), or if it lights at any other time, a fault in the S.I.R. system is indicated which should be investigated without delay (see section WB.4). as the S.I.R may not function correctly.

WB.1 - D ASSEMBLY LINE DIAGNOSTIC LINK (ALDL)

The Assembly Line Diagnostic Link (ALDL) takes the form of a ten-way electrical connector, located ahead of the glovebox and stowed in a dummy socket fixed to the base of the a/c evaporator housing (a/c cars), or at the front of the passenger footwell (heater cars). The connector provides a communicating link with both the S.I.R. Diagnostic Energy Reserve Module (DERM) and the engine management ECM, and is used:

i) at the end of the production line to check out the engine management and SIR systems;

ii) to connect the hand held diagnostic scanner tool ('Tech 1').

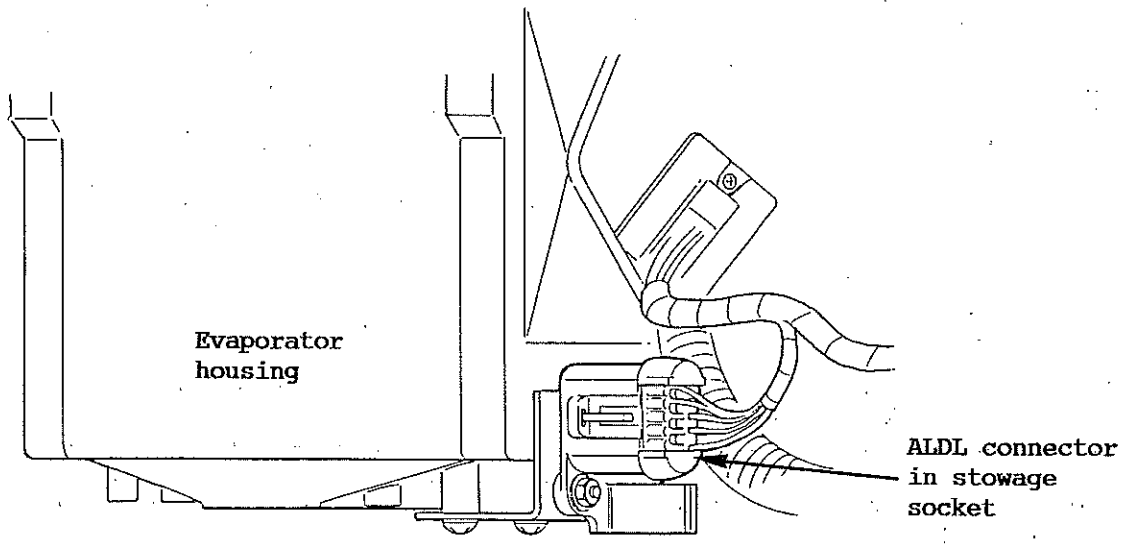

WB.1 - E TROUBLE CODES

When the vehicle is operating, the Diagnostic Energy Reserve Module (DERM) continuously monitors the resistance of various parts of the SIR electrical circuit, and compares these values with pre-programmed tolerance bands to enable it to recognise 'faults' in the system and light the SIR tell tale lamp on the fascia. If such a fault is detected, the DERM stores a 'Trouble Code' (a number such as 21, 32 etc) for that particular type of fault in its memory.

The DERM maintains a history of all trouble codes that have been detected since the SIR codes were last cleared during a vehicle service. The trouble codes are also stored according to class:

i) Current Codes - Faults that are currently being detected. Current codes are stored in the DERM random access memory (RAM).

ii) History Codes - All faults detected since the last time they were cleared. History codes are stored in the DERM electronically erasable programmable read only memory (EEPROM).

WB.1 - F 'TECH 1' SCANNER TOOL

The 'Tech 1' is a hand held electronic scanner tool with an LCD display panel which, by plugging into the ALDL connector, and then turning on the ignition, is able to display (numerically) any stored SIR trouble codes, current or history, and enable all codes to be cleared from the DERM memory. The tool is the same as that used for engine management fault diagnosis, with the SIR data included in the single calibration cartridge T000T0898/3. This level of cartridge is identified by "LOTUS 89-90 ECM 'PLUS'". Use the operating instruction booklet supplied in the 'Tech 1' kit.

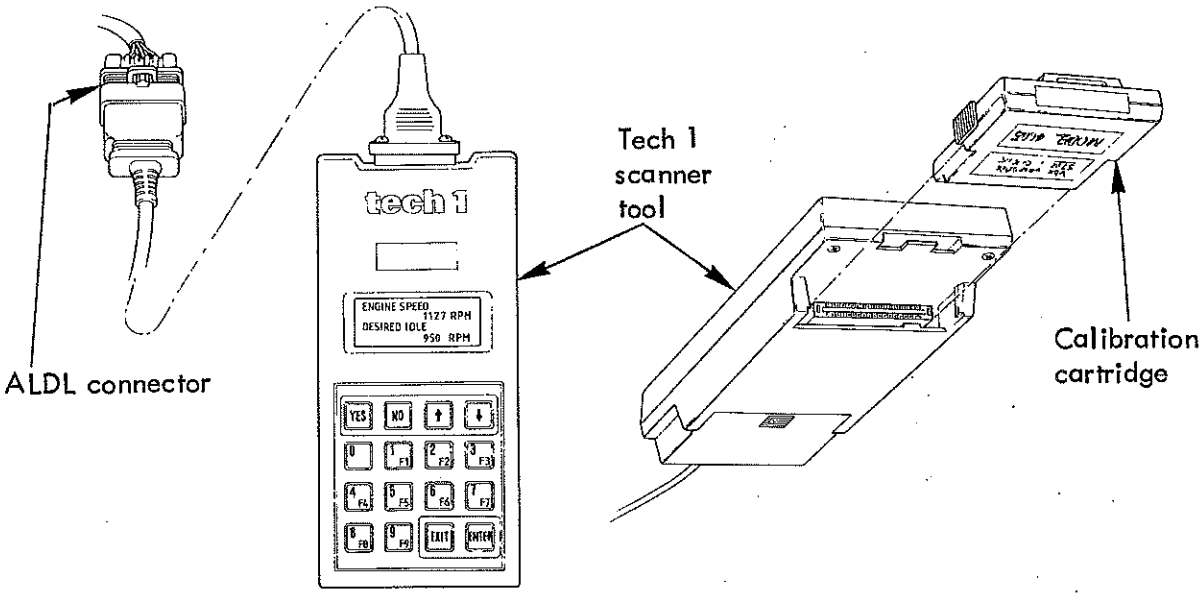

WB.1 - G SAFETY PRECAUTIONS, SHIPPING, STORAGE & DISPOSAL

General

The DERM can maintain sufficient voltage to cause a deployment for up to 10 minutes after the ignition is turned off and the battery is disconnected. Many of the service procedures require disconnection of the inflator module from the deployment loop to avoid accidental deployment. The following procedure will disable the SIR system:

1. Turn off the ignition.
2. From within the driver's footwell, remove the two SIR fuses from their holders fixed to the knee bolster support bracket.
3. Unplug the orange 3-way connector to the inflator module alongside the steering column, and plug the harness connector into the column load tool T000T1035 to prevent false fault codes being set.

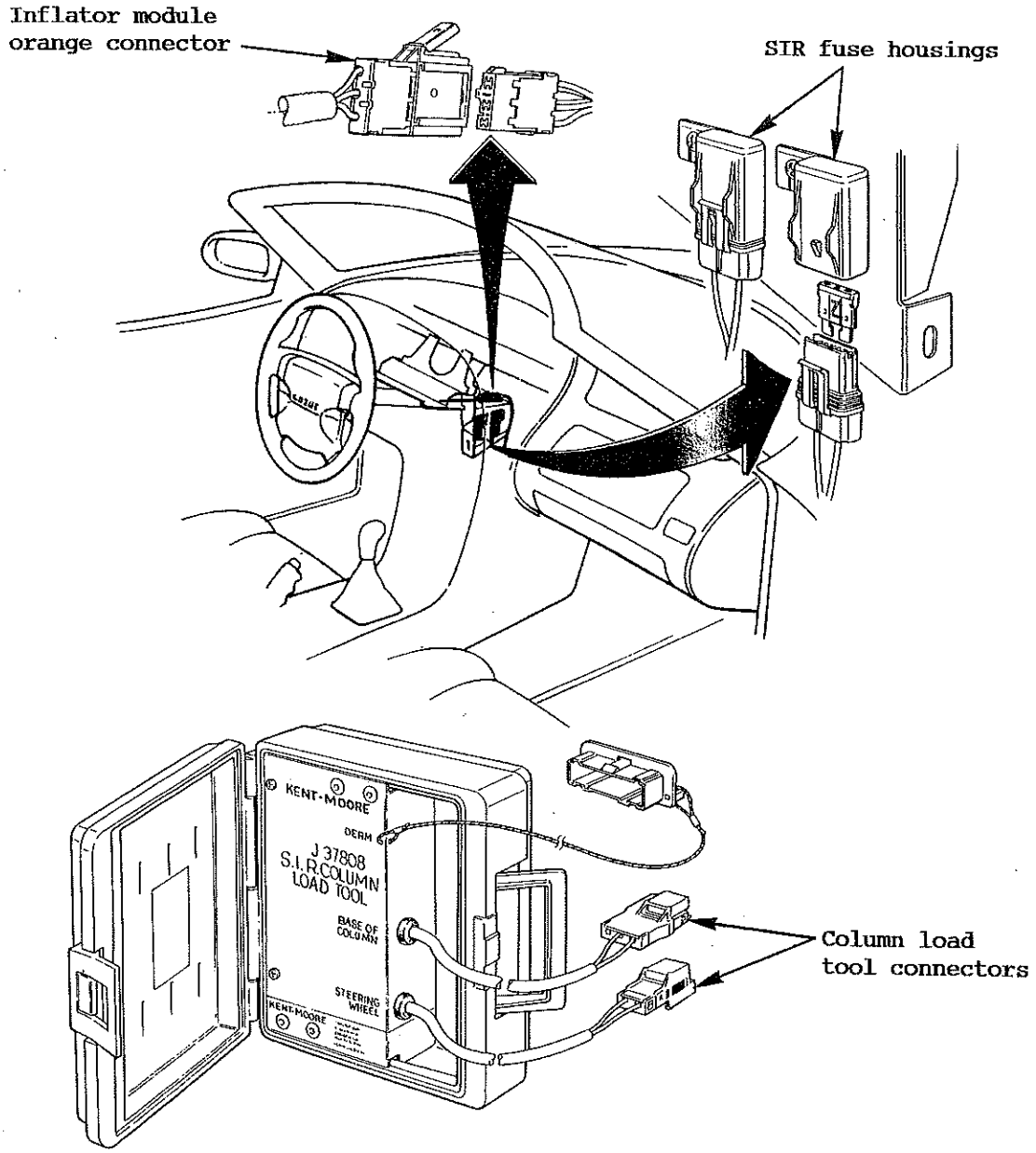

When all service work is completed, the following procedure should be followed:

1. Disconnect the column load tool, and reconnect the orange 3-way connector between SIR harness and steering column.
2. Refit the two SIR fuses.
3. Turn on the ignition, and conduct 'SIR Diagnostic System Check' according to section WB.4.

Storage:
- SIR modules, DERMs and sensors should not be stored at temperatures above 80°C (176°F).
- SIR modules, DERMs and sensors should not be stored in damp conditions.
- Do not stack SIR boxes more than two high.
- All SIR boxes and pallets must be stored and handled in an upright position. Never store SIR modules upside down.

Sensors

All sensors are calibrated specifically to a particular vehicle, and are keyed to the mounting brackets and the SIR harness. Caution should be used to assure proper location of the sensors to their mounting brackets. The keying of the sensors to their mounting brackets should never be modified in the field. Refer to section WB.3 for removal/replacement procedures for the forward and passenger compartment discriminating sensors, and the arming sensor.

CAUTION: Be very careful when handling a sensor. Never strike or jar a sensor, as this could cause deployment and result in personal injury or improper operation of the SIR system. All sensors and mounting bracket bolts must be carefully torqued to assure proper operation. Never power up the SIR system when any sensor is not rigidly attached to the vehicle, since the sensor is easily activated when not attached, and could result in deployment. Do not use or attempt to repair a damaged sensor or DERM. Replace any sensor that has been activated accidentally, and replace all three sensors after a collision involving inflator module deployment.

INFLATOR MODULE

Live (Undeployed) Inflator Modules

Special care is necessary when handling and storing a live (undeployed) inflator module. The rapid gas generation produced during deployment of the air bag could cause the inflator module, or object in front of the module to be thrown through the air in the unlikely event of accidental deployment.

CAUTION: When carrying a live inflator module, make sure the bag and trim cover are pointed away from you. In case of an accidental deployment, the bag will then deploy with inimal chance of injury. When placing a live inflator module on a bench or other surface, always face the bag and trim cover up, away from the surface. This is necessary so that a free space is provided to allow the air bag to expand in the unlikely event of accidental deployment. Otherwise personal injury may result. Also never carry the inflator module by the wires or connector on the underside of the module. Do not use or attempt to repair a damaged inflator module, and NEVER apply any electrical power to the module except as specified in the diagnostic procedures.

Inflator Module Shipping Procedures for Live (Undeployed) Inflator Modules

The transportation of uninstalled inflator modules is regulated by the Hazardous Materials Regulations of the U.S. Dept. of Transportation (DOT) and

most state governments. Special procedures are required for transportation. Lotus recommends that the dealers and repair shops check with the hazardous material section of their respective state police authority for applicable shipping requirements.

For all shipments on public roads, the DOT has classified the uninstalled inflator module as a flammable solid under a special exemption process. It should always be shipped and stored in the approved cardboard container in which it is purchased. The container should be marked with "Flammable Solid , n.o.s., UN1325, DOT-E8236" and labelled with the specified red and white flammable solid label. Each shipping location must have a copy of the exemption on file. A shipping paper (i.g., a customer receipt) must accompany each shipment and identify the module as "Flammable Solid, n.o.s., UN1325, DOT-E8236". Transportation, storage and handling of the module should be in accordance with the exemption and the requirements for a DOT flammable solid. Do not expose the module to heat, open flame, impact, friction, or electrical charge.

Inflator Module Scrapping Procedures

CAUTION: Failure to follow proper SIR inflator module disposal procedures can result in air bag deployment which may cause personal injury. Undeployed inflator modules must not be disposed of through normal refuse channels. The undeployed inflator module contains substances that can cause severe illness or personal injury if the sealed container is damaged during disposal. Disposal in any manner inconsistent with proper procedures may be a violation of federal, state and/or local laws.

Reference should be made to the local State authority for the correct disposal procedures for deployed inflator modules.

Vehicle Scrapping Procedures

Some vehicles equipped with SIR systems that have live (undeployed) inflator modules may have to be scrapped because they have completed their useful life, or have been severely damaged in a non-deployment type accident. The following procedure should be followed when scrapping a vehicle with an undeployed module.

1. Turn ignition switch 'off'.
2. Unplug the orange 3-way connector to the inflator module, alongside the steering column.
3. Cut the **harness side** of the SIR wiring approx. 3 to 6 inches from the orange 3-way connector.
4. Splice 2 wires at least 20 feet long to the white and the slate coloured cables in this connector block.
5. Reconnect the orange 3-way connector block now equipped with 2 x 20ft long cables.
6. Check that the inflator module is secured to the steering wheel.
7. Remove all loose objects from the front seat.
8. Ensure no one is in the vehicle.
9. Stretch wires away from car to their full length.
10. Apply 12 volts across the wires to deploy the air bag.
11. Do not touch the inflator module area for 20 minutes due to the heat generated during deployment.
12. Wear gloves and safety glasses to handle the deployed air bag. Wash your hands with mild soap and water afterwards.

Deployed Inflator Modules

CAUTION: Safety precautions must be observed when handling a deployed inflator module. After deployment, the air bag surface may contain a white packing powder used to ease deployment, together with a small amount of sodium hydroxide dust, a by-product of the sodium azide reaction during deployment that can be irritating to the skin if left on for an extended period of time. Always wear gloves and safety glasses when handling a deployed inflator module, and wash your hands with a mild soap and water afterwards.

WB.1 - H INSPECTIONS REQUIRED AFTER AN ACCIDENT

All SIR system components, including harness and brackets, must be inspected after an accident. If any are damaged or bent, they must be replaced even if a deployment did not occur. Inspect the steering column, knee bolster, and their mounting brackets for damage. Do not attempt to service the forward and passenger compartment discriminating sensors, arming sensor, DERM, coil assembly or inflator module. Service is by replacement only.

Check that the steering column has not telescoped (see section WB.3 - L).

CAUTION: Proper operation of the sensors and SIR system requires that any repairs to the vehicle structure return it to its original production configuration. Deployment (current Code 51) or any visible damage to the sensors and/or their respective mounting brackets requires replacement, not repair.

WB.1 - I SPECIAL TOOLS

CAUTION: To avoid deployment when troubleshooting the SIR system, do not use electrical equipment such as battery powered or AC powered voltmeter, ohmeter etc., or any type of electrical equipment other than those specified in this manual. Do not use a non powered probe type tester. Instructions in this manual must be followed carefully, otherwise personal injury may result.

Required Tools:

'Tech 1' Diagnostic Scanner Kit T000T0896

Plugs into ALDL connector and displays stored trouble codes and sensor readings. Kit includes scanner, cartridge, lead, self-test adaptor, operator's manual and carrying case. (Also used for engine management diagnosis)

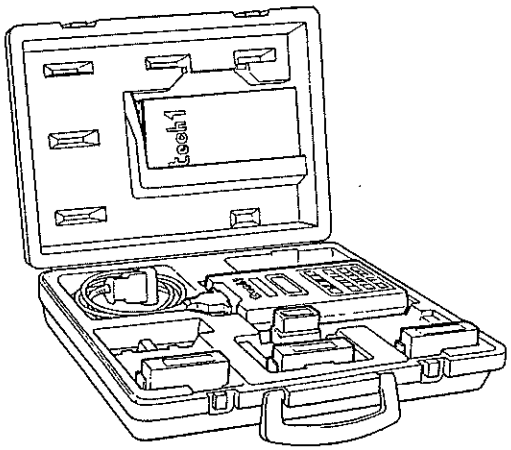

Connector Lead, 'Tech 1' Scanner T000T0897/2

Included in 'Tech 1' kit T000T0896.
Connects Tech 1 to ALDL socket.
/2 lead identified by 'TA00053'
embossed in gold lettering on the
ALDL end connector.

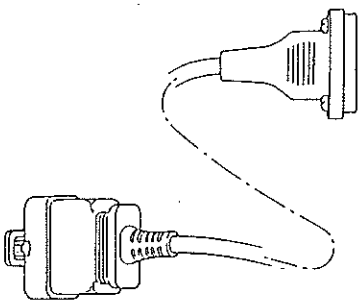

Calibration Cartridge, 'Tech 1' Scanner T000T0898/3

Included in 'Tech 1' kit T000T0896.
Plugs into Tech 1 scanner. Contains data
for Esprit and Elan models.
Identified by "LOTUS 89-90 ECM 'PLUS'".

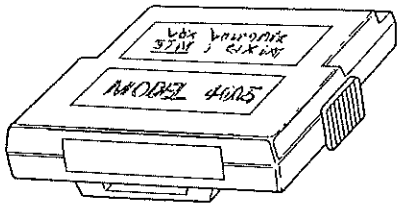

Digital Volt Ohm Meter (DVOM) T000T1034

High impedance multimeter used to diagnose
electrical circuits without affecting the
current in the circuit under test.

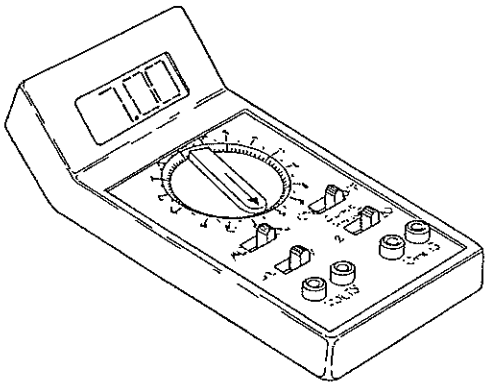

Inflator Module & Steering Column Replacement Load T000T1035

Used in diagnostic procedures to simulate
the resistance of the inflator module, or
steering column components, and prevent
false trouble codes being set.
Also includes a DERM connector socket to
hold open the shorting bars of the harness
connector block to aid circuit diagnosis.

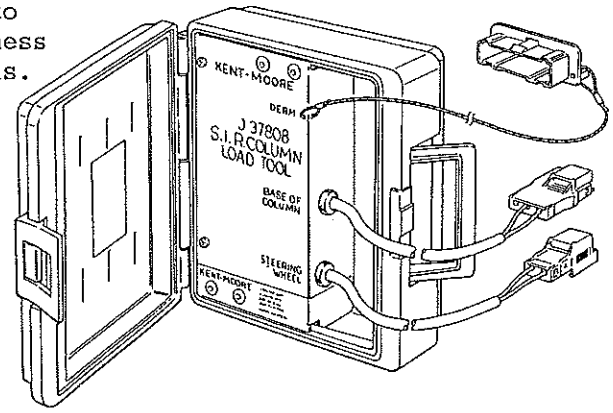

Connector Test Adaptor Kit T000T0902

Used to make electrical test connections to wiring harnesses. (Also used for engine management diagnosis)

Wire Repair Kit T000T1036

Used to make wiring harness repairs. Includes instruction manual. When used to repair SIR system wiring, ALWAYS USE THE 'CRIMP & SEAL' SLEEVES.

WB.1 - J WIRING REPAIR

Wiring repair procedures are included in the wiring repair kit tool T000T1036 instruction manual. When repairing any wiring associated with the inflatable restraint system ALWAYS USE THE 'CRIMP & SEAL SPLICE SLEEVES' CONTAINED WITHIN TOOL T000T1036

WB.1 - K ABBREVIATIONS & DEFINITIONS

ALDL: Assembly Line Diagnostic Link. Connector block located in the passenger footwell used to connect 'Tech 1' scanner tool.

ARMING SENSOR: A sensor on the high side (+ve feed side) of the deployment loop calibrated to supply voltage to the inflator module when vehicle velocity changes are severe enough to warrant arming of the air bag.

CONTINUOUS MONITORING: Tests performed by the DERM on the SIR system every 100 milliseconds while ignition voltage is present at the DERM.

DATA LINK: A signal wire used for communications between multiple on-board computers or from an on-board to an off-board computer.

DEPLOY: To inflate the air bag.

DEPLOYMENT LOOP: The circuit that supplies current to the inflator module to deploy the air bag.

DERM: Diagnostic Energy Reseve Module. Provides reserve energy to the deployment loop and diagnostic monitoring of all system components.

FORWARD DISCRIMINATING SENSOR: A sensor on the low side (or ground side) of the deployment loop calibrated to ground the inflator module when vehicle

velocity changes are severe enough to warrant deployment of the air bag.

EEPROM: Electrically Erasable Programmable Read Only Memory.

FORCE HI: An output of the DERM which injects current into the steering column circuit during the 'Steering Column Resistance' tests.

FORCE LOW: An input of the DERM which grounds the steering column circuit during the 'Steering Column Resistance' tests.

INFLATOR MODULE: An assembly located beneath the steering wheel hub trim cover, consisting of an air bag and inflator.

NON-POWERED PROBE TYPE TESTER: Test light.

PASSENGER COMPARTMENT DISCRIMINATING SENSOR: A sensor on the low (ground) side of the deployment loop calibrated to ground the inflator module when vehicle velocity changes are severe enough to warrant deployment of the air bag.

RESISTOR MODULE: An assembly of resistors in the SIR harness between the DERM and steering wheel which allows the DERM to monitor the deployment loop for faults and detect when a vehicle accident has occurred.

ROTARY CONNECTOR: A current carrying coil in the deployment loop that allows the rotation of the steering wheel while maintaining the continuous contact of the deployment loop through the inflator module.

SCAN TOOL: Tool ('Tech 1') used to read diagnostic information from the DERM via the ALDL connector.

SENSE HI: An input to the DERM on the high side of the deployment loop which the DERM monitors for fault detection.

SENSE LOW: An input to the DERM on the low side of the deployment loop which the DERM monitors for fault detection.

SIR: Supplementary Inflatable Restraint.

SIR COIL: Another term for 'Rotary Connector'.

'STEERING COLUMN RESISTANCE': Inflator module, SIR coil and steering column wiring tests, which the DERM performs once each ignition cycle when no faults are detected during 'turn on' or 'continuous monitoring'.

SYSTEM VOLTAGE: Voltage available at the battery at the time of the indicated voltage measurement. With the key on, and the engine not running, the system voltage will likely be between 12 and 12.5 volts. At idle the voltage may be 12.5 to 14.2 volts and as low as 10 volts during cranking.

'TURN ON': Tests which the DERM performs on the SIR system once during each ignition cycle immediately after ignition 1 voltage is applied to the DERM.

36VLR: 36 Volt Loop Reserve. Energy supply from the DERM which provides deployment power when vehicle voltage is low or is lost in an accident.

SECTION WB.2

COMPONENT FUNCTION

	Sub-Section	Page
Deployment Loop	WB.2 - A	2
Diagnostic Energy Reserve Module (DERM)	WB.2 - B	3
SIR Tell Tale Lamp	WB.2 - C	4
Arming Sensor	WB.2 - D	4
Discriminating Sensors	WB.2 - E	5
Rotary Connector (S.I.R. Coil)	WB.2 - F	7
Inflator Module	WB.2 - G	8
Resistor Module	WB.2 - H	8
Knee Bolster	WB.2 - I	9
Steering Column	WB.2 - J	9

WB.2 - A DEPLOYMENT LOOP

The two main parts of the SIR electrical system are the deployment loop and the Diagnostic Energy Reserve Module (DERM). The main function of the deployment loop is to supply current to the inflator module in the steering wheel to deploy the air bag in the event of a sufficiently severe accident. The deployment loop consists of:

- the arming sensor;
- passenger compartment discriminating sensor;
- forward discriminating sensor;
- SIR coil assembly;
- inflator module.

In order for the inflator module to deploy the air bag, it must receive both a positive feed, and an earth. The positive feed is controlled by the arming sensor, which switches a feed from either the ignition supply, or from the DERM, when it senses a deceleration of a certain magnitude. The earth connection to the inflator module is controlled by two 'discriminating' sensors, one passenger compartment sensor mounted in unit with the arming sensor, and one forward sensor mounted at the front of the vehicle. If either or both of these discriminating sensors detects a severe deceleration, the sensor switch closes and supplies an earth connection to the inflator module. Thus for the air bag to deploy, both the arming sensor and one of the two discriminating sensors must be activated simultaneously.

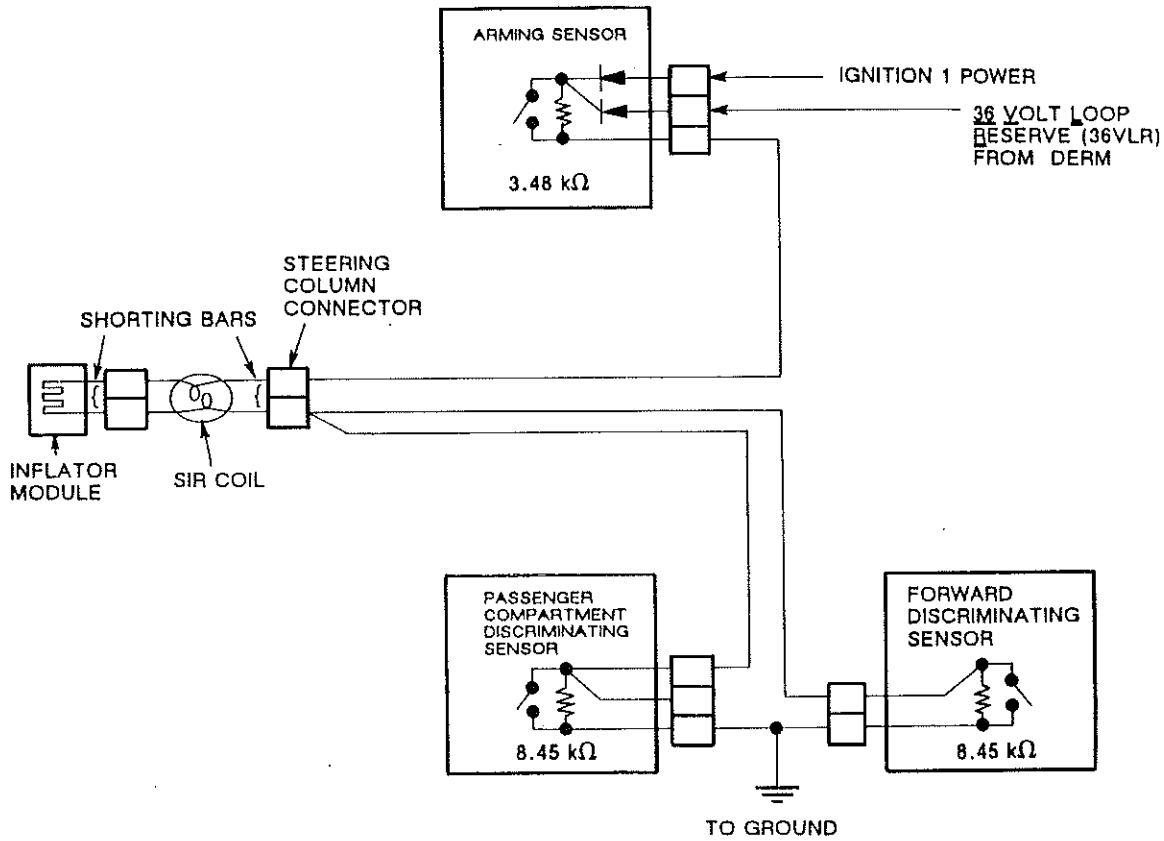

WB.2 - B DIAGNOSTIC ENERGY RESERVE MODULE

Deployment of the air bag can take place from an ignition power supply as low as 7.5 volts as sensed at the arming sensor. However, in case the ignition power supply is lost in the course of an accident, an energy reserve module is fitted which is able to store energy for several seconds after ignition voltage is lost. The DERM is located on the bracing strut between the scuttle beam and the centre tunnel, ahead of the fascia switch panel.

A second function of this module is to provide electrical fault diagnosis. Resistors incorporated in the arming sensor and discriminating sensors, and a separate resistor module enable the DERM to detect circuit and component faults within the deployment loop. The DERM monitors the voltage drop across each component within the loop during normal non-deployment conditions, and if this falls outside of specified limits, the DERM stores a 'trouble code' and lights the SIR tell tale lamp on the fascia.

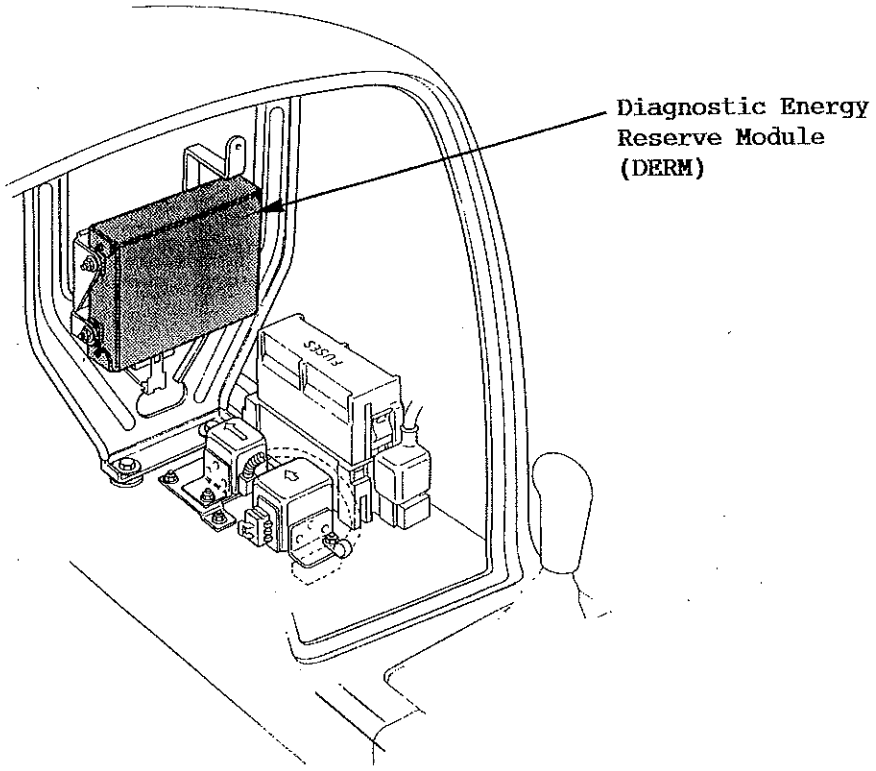

The DERM is the central computer of the SIR system, and performs the following functions:

1. Energy reserve: The DERM maintains a 36 Volt Loop Reserve (36VLR) energy supply to provide deployment energy for several seconds when the vehicle voltage is low or is lost in an accident.

2. Malfunction detection: The DERM performs diagnostic monitoring of SIR systems electrical components.

3. Malfunction recording: The DERM provides SIR system fault code information through a scan tool ('Tech 1').

4. Driver notification: The DERM warns the vehicle driver of SIR system faults by lighting a tell tale lamp on the fascia.

5. Accident recording: The DERM records the SIR system status during a vehicle accident.

The DERM is connected to the SIR harness by a 24-way connector equipped with a shorting bar across certain terminals. When the connector is unplugged, the shorting bar connects the SIR tell tale lamp low side to earth. This causes the tell tale to come on steady whenever the ignition is switched on and the DERM is disconnected.

WB.2 - C S.I.R. TELL TALE LAMP

The SIR tell tale is located in the instrument panel. Battery voltage is applied to the lamp when the ignition is switched on, with the ground circuit being controlled by the DERM. The purpose of the lamp is to:

- warn the vehicle driver of SIR electrical system faults which could potentially affect operation of the SIR system.

- verify DERM (and tell tale) operation by flashing for about 8 seconds when the ignition is turned on.

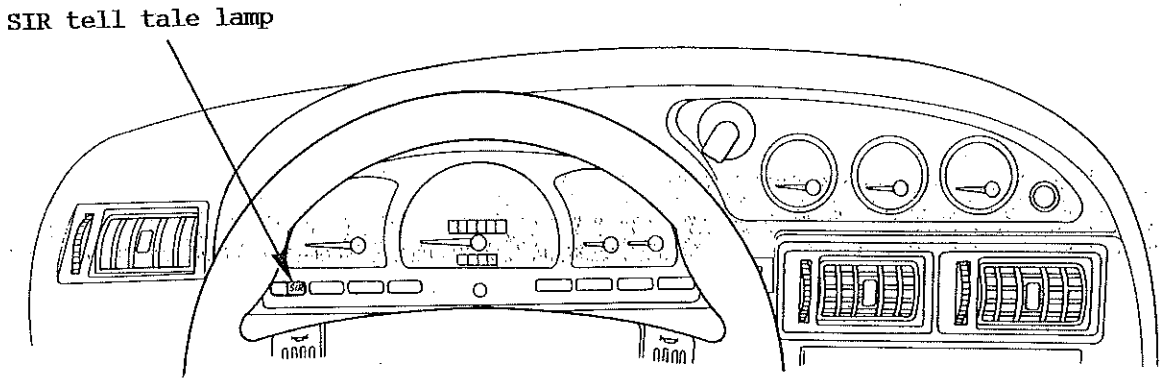

The SIR tell tale lamp is the key to driver notification of SIR system faults. The lamp is fully diagnosed in section WB.4.

WB.2 - D ARMING SENSOR

The arming sensor is a protective switch fitted in the power feed side (or high side) of of the deployment loop. The arming sensor is calibrated to close at low level velocity changes (lower than the discriminating sensors) in order to assure that the inflator module is connected directly to the 36VLR output of the DERM or ignition voltage when either of the discriminating sensors close.

The arming sensor is located on the centre tunnel top between the fascia and scuttle brace, and consists of;

- a sensing element;
- normally open switch contacts;

- a diagnostic resistor;
- two steering diodes.

The sensing element closes the normally open switch contacts when the vehicle speed changes at a rate indicating potential need for SIR deployment.

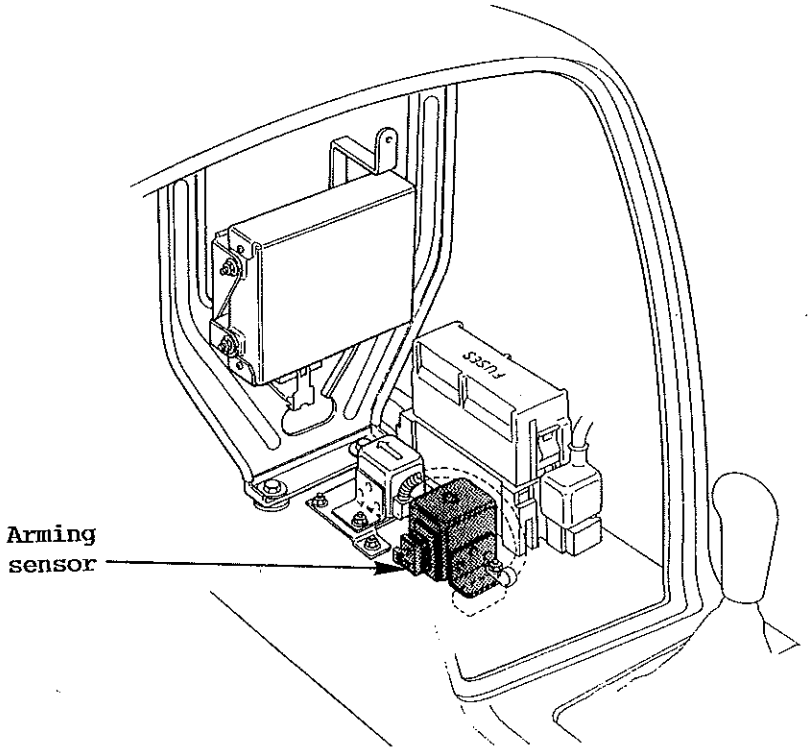

The diagnostic resistor is connected in parallel with the normally open switch contacts, and allows a small amount of current through the deployment loop during normal non-deployment conditions. This small current flow results in small current drops across each component within the loop. The DERM monitors these voltage drops to detect circuit or component faults. The two steering diodes provide isolation between the 36VLR output of the DERM and ignition voltage.

The arming sensor should be replaced after an accident involving SIR deployment.

WB.2 - E DISCRIMINATING SENSORS

There are two discriminating sensors in the SIR system. The forward discriminating sensor is mounted on a bracket on the chassis front frame, beneath the front edge of the front topshell. The passenger compartment discriminating sensor is mounted on the centre tunnel top, ahead of the fascia switch panel and just behind the arming sensor. The discriminating sensors are wired in parallel on the ground side (or low side) of the deployment loop. These sensors are calibrated to close if the change of vehicle speed is severe enough to warrant SIR deployment.

The discriminating sensors consist of a sensing element, normally open switch contacts, and a diagnostic resistor. The sensing element closes the normally open switch contacts when the change of vehicle speed is severe enough to warrant SIR deployment. A diagnostic resistor is connected in parallel with the normally

open switch contacts within each of the discriminating sensors. These parallel resistors supply the ground path for the current passing through the deployment loop during normal non-deployment conditions. This small current flow results in voltage drops across each component within the loop. The DERM monitors these voltage drops to detect circuit or component faults.

Both the discriminating sensors should be replaced after an accident involving SIR deployment.

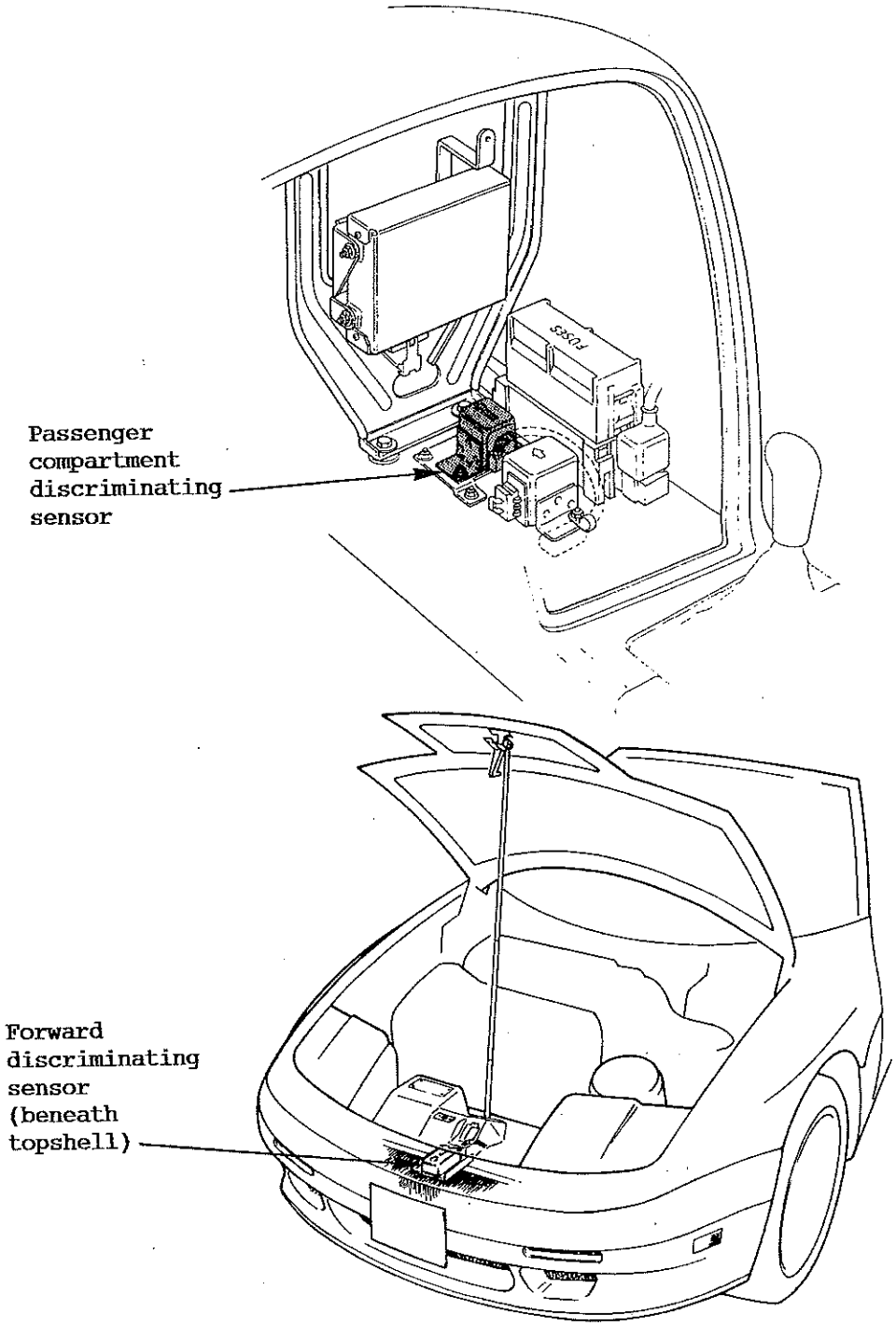

WB.2 - F ROTARY CONNECTOR (S.I.R. COIL)

The rotary connector (also referred to as the S.I.R. coil) is a device which fits between the steering wheel and column, and allows the steering wheel to turn whilst maintaining electrical continuity to the inflator module. The assembly consists of an annular housing fitted over the top end of the steering column, and containing a coil of three wires. The wires are:

- +ve feed to the inflator module (switched by the arming sensor);
- earth connection for the inflator module (switched by the discriminating sensors);
- +ve feed to the horn.

The steering column side of the device is fitted with a 3-way connector block which plugs into the SIR harness, and the steering wheel side of the device connects with the inflator module via a 2-way connector, and the horn buttons via a single connector. The coil housing is constructed in two parts, with the outer part fixed to the outer (stationary) column, and the inner part fixed to the inner (rotating) column.

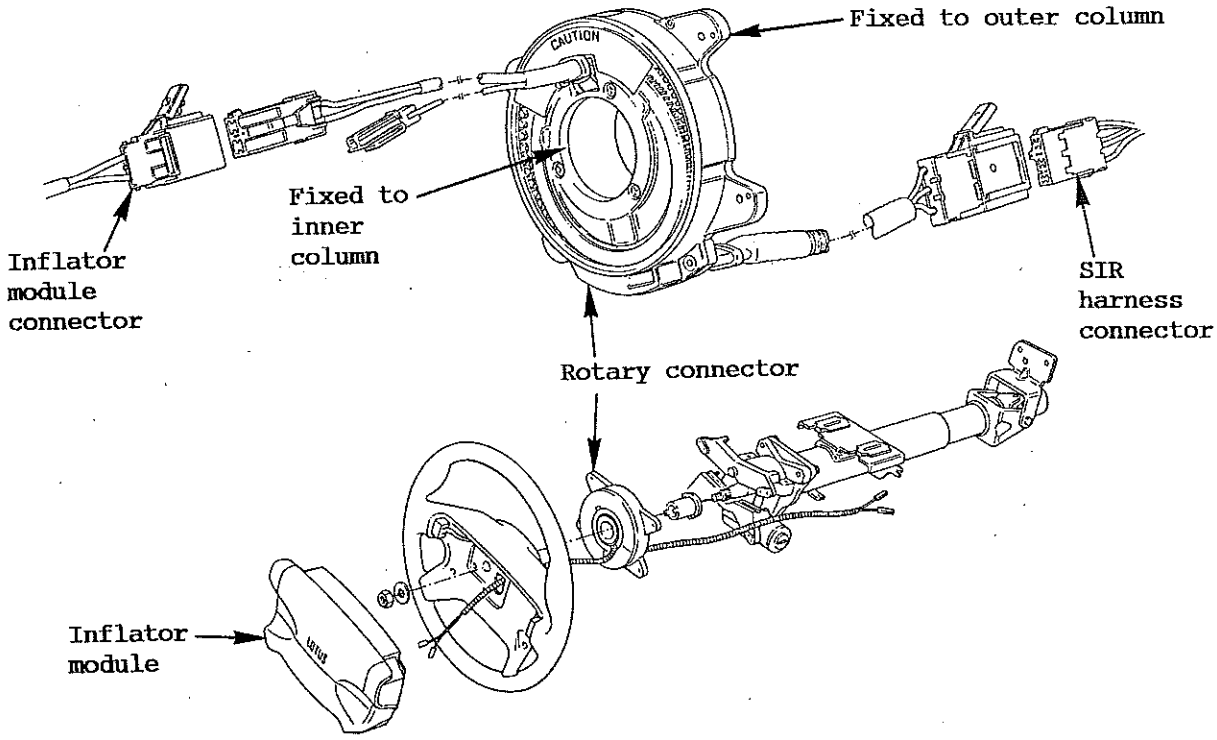

The two parts of the coil housing slide inside of each other in such a way as to allow the steering wheel to be rotated through its full travel, lock to lock, whilst maintaining an unbroken feed to each of the three circuits in the steering wheel hub, via the continuous wires in the coils.

In order to help prevent unwanted deployment of the air bag when servicing the steering column or other SIR components, a shorting bar is incorporated in the rotary connector side of the 3-way SIR harness connector plug. This shorting bar operates when the connector is unplugged, to short across the feed and return connections to the inflator module. Thus, if a positive feed, or earth is inadvertently applied to the connector terminals, both sides of the inflator module will be subject to the same potential, and no deployment will occur.

WB.2 - G INFLATOR MODULE

The inflator module is located in the steering wheel hub, beneath a moulded trim cover designed to hinge open in the event of deployment. The module consists of:

- an inflatable fabric bag;
- an inflator (canister of gas generating material);
- an initiator.

When the vehicle suffers a deceleration of sufficient force to close, simultaneously, the arming sensor and at least one of the discriminating sensors, current flows through the deployment loop and initiator, and ignites the gas generating material. The bag inflates in a fraction of a second, bursting open the hinged trim cover, and then deflates via vents in the bag, with the whole cycle taking less than one second. The inflator module is designed for a single deployment, and must then be replaced.

In order to help prevent unwanted deployment of the air bag when servicing the steering column or other SIR components, a shorting bar is incorporated in the inflator module side of the 2-way connector plug between the inflator module and coil assembly. This shorting bar operates when the connector is unplugged, to short across the feed and return connections to the inflator module. Thus, if a positive feed, or earth is inadvertently applied to the connector terminals, both sides of the inflator module will be subject to the same potential, and no deployment will occur.

WB.2 - H RESISTOR MODULE

The resistor module is connected into the SIR harness between the inflator module and the DERM, and is mounted on top of the knee bolster support bracket between the pedal box and the scuttle beam.

The resistor module contains various resistors which are balanced against those in the arming and discriminating sensors, in order to allow the DERM to monitor the voltage drops across the various components of the deployment loop. In this way, faults can be detected by the DERM during normal non-deployment conditions, and the SIR tell tale operated if necessary to alert the driver.

Two other functions of the resister module, are to enable the DERM to detect and record when a deployment has occurred, and to reduce the possibility of unwanted deployment if the SIR wiring harness is damaged.

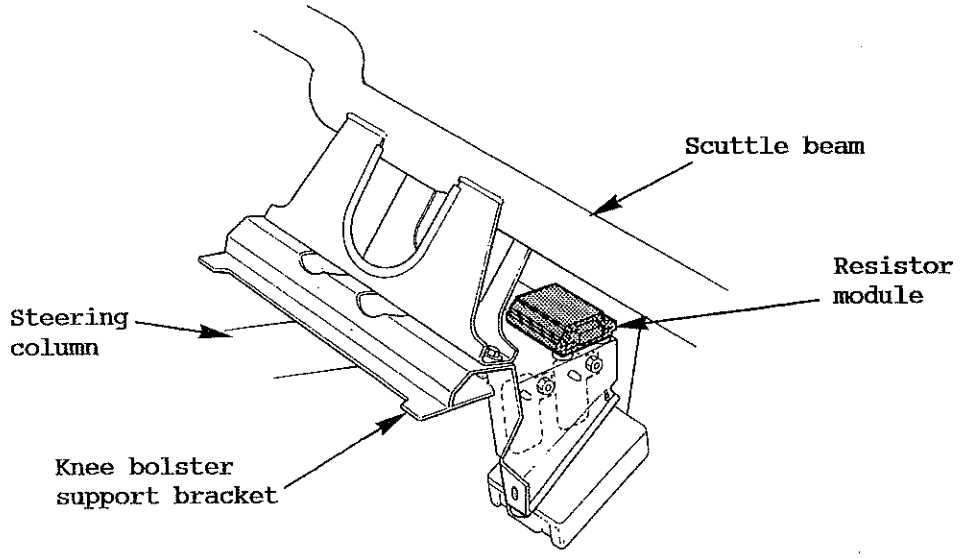

WB.2 - I KNEE BOLSTER

To provide additional protection to the driver, and limit leg movement caused by impact during an accident, a knee bolster is fitted to the underside of the driver's fascia. The bolster is constructed from energy absorbing foam, bonded to supporting metalwork which is itself bolted to the scuttle beam, door hinge post, and tunnel side. The foam used is non-recovering, and if compressed as a result of an accident or any other cause, and deformation of the surface profile is evident, the knee bolster should be replaced.

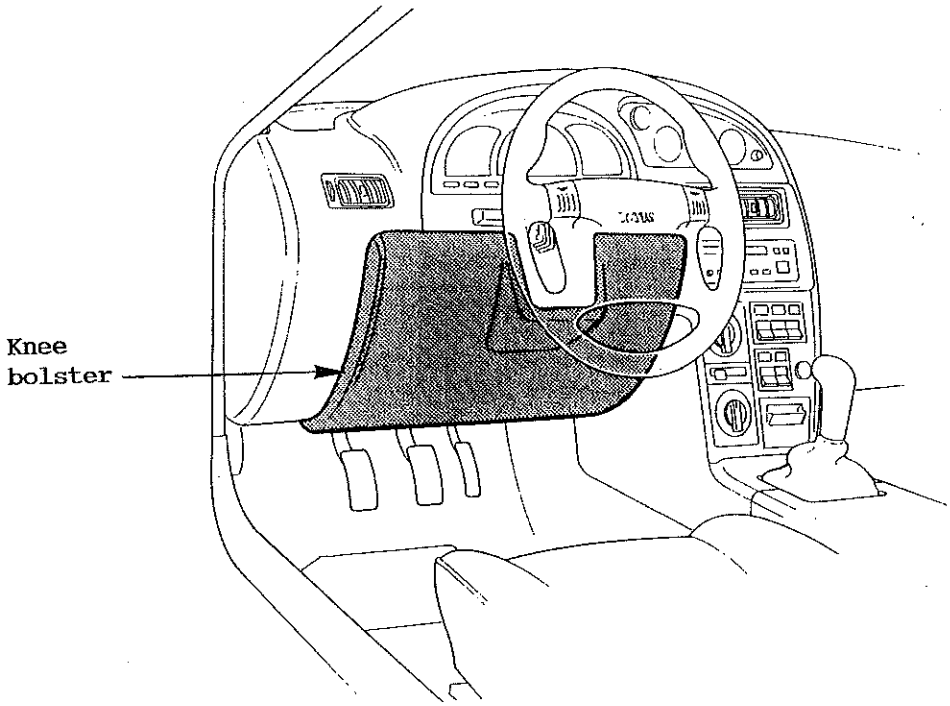

WB.2 - J COLLAPSIBLE STEERING COLUMN

Both inner and outer upper steering columns are telescopically collapsible, if an axial load above a specified figure is applied to the column in the course of an accident. The lower end of the outer column is secured to the pedal box via a hinge bracket and two fixing bolts. The top end of the outer column is secured to the scuttle beam via two fixing bolts and 'break out' inserts, which are retained in slots in the column brackets by nylon pins. These pins are designed to shear in an accident, and allow the upper half of the column to break free of the scuttle beam and telescope downwards. The two parts of the outer column are connected via grip collars, and the assembly must be replaced if collapsed. The two parts of the inner column are connected by a telescopic joint, the length of which is fixed by buttons locating in grooves, which may be overidden by a specified force. The assembly must be replaced if collapsed.

A short intermediate column connects the upper column to the steering rack pinion shaft, with two maintenance free universal joints used between the three elements.

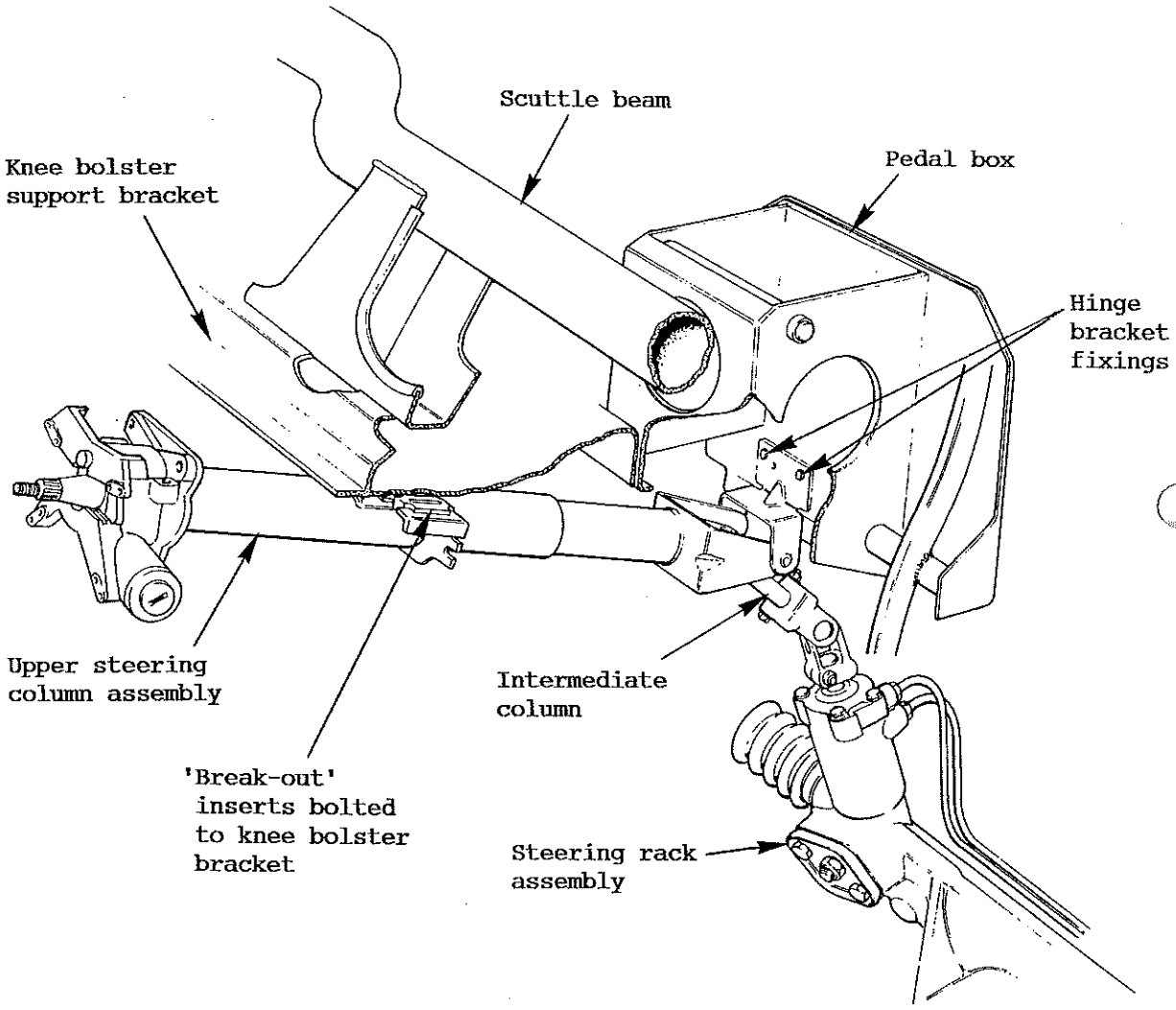
Scuttle beam
Knee bolster support bracket
Pedal box
Hinge bracket fixings
Upper steering column assembly
Intermediate column
'Break-out' inserts bolted to knee bolster bracket
Steering rack assembly

SECTION WB.3

COMPONENT REPLACEMENT

	Sub-Section	Page
Crank & Run Fuses	WB.3 - A	2
SIR Tell Tale Lamp	WB.3 - B	2
Knee Bolster	WB.3 - C	3
Resistor Module	WB.3 - D	4
Diagnostic Energy Reserve Module (DERM)	WB.3 - E	5
Arming Sensor	WB.3 - F	8
Passenger Compartment Discriminating Sensor	WB.3 - G	10
Forward Discriminating Sensor	WB.3 - H	11
Inflator Module	WB.3 - I	14
Steering Wheel	WB.3 - J	16
Rotary Connector (S.I.R. Coil)	WB.3 - K	17
Steering Column Assembly	WB.3 - L	19

WB.3 - A CRANK & RUN FUSES

The 5 amp fuses for the crank and run input circuits to the DERM, are located in yellow protective housings on the knee bolster mounting bracket between the pedal box and scuttle beam, just above the logic/buzzer module. The fuse holders may be withdrawn from their housings after pulling back the locking tab. Use the illustration as a guide while feeling for the fuse holders on the inside surface of the bolster bracket.

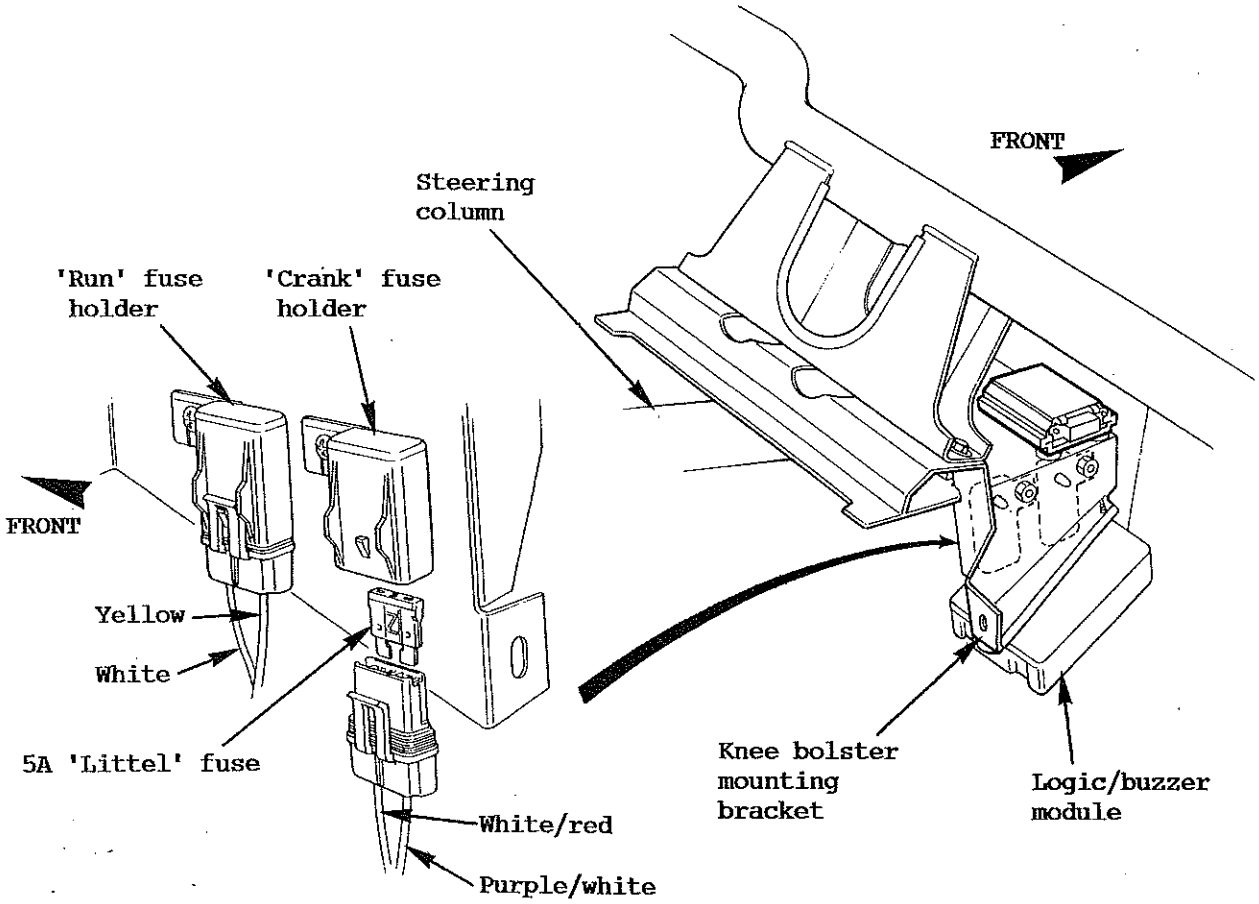

The crank fuse is identified by white/red and purple/white cables, and is the rearmost of the two fuses. The run fuse has yellow and white cables and is mounted ahead of the crank fuse. 5 amp 'Littel' fuses, A082M6245F (amber), are used in both circuits, with the fuse housings secured by a push in fixing and a single screw.

WB.3 - B S.I.R. TELL TALE LAMP

The SIR tell tale lamp is located in the instrument panel, with access to the bulb available via the removeable hatch in the top of the instrument binnacle. Twist the black bulbholder counterclockwise and withdraw from the cluster. The bulb is supplied complete with holder under part number A100N6012S.

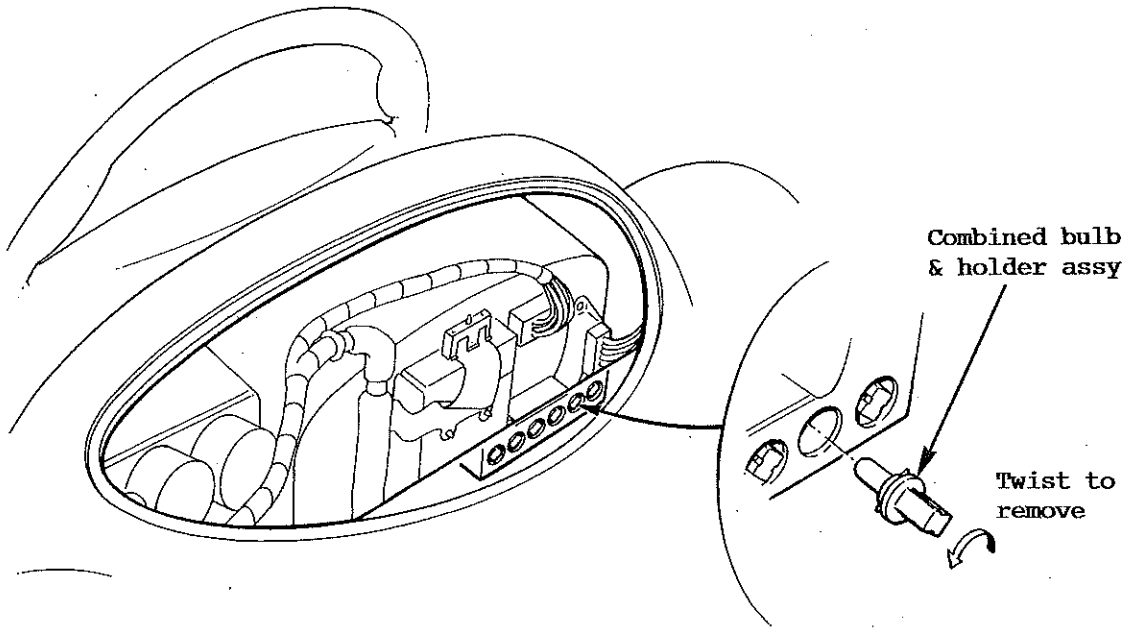

WB.3 - C KNEE BOLSTER

The knee bolster is supported by a mounting bracket which is bolted to both the pedal box and the scuttle beam. Two studs, fitted into the lower part of the bolster, pass through vertical flanges in the bracket, and two spring steel clips hook onto the horizontal rear flange of the bracket.

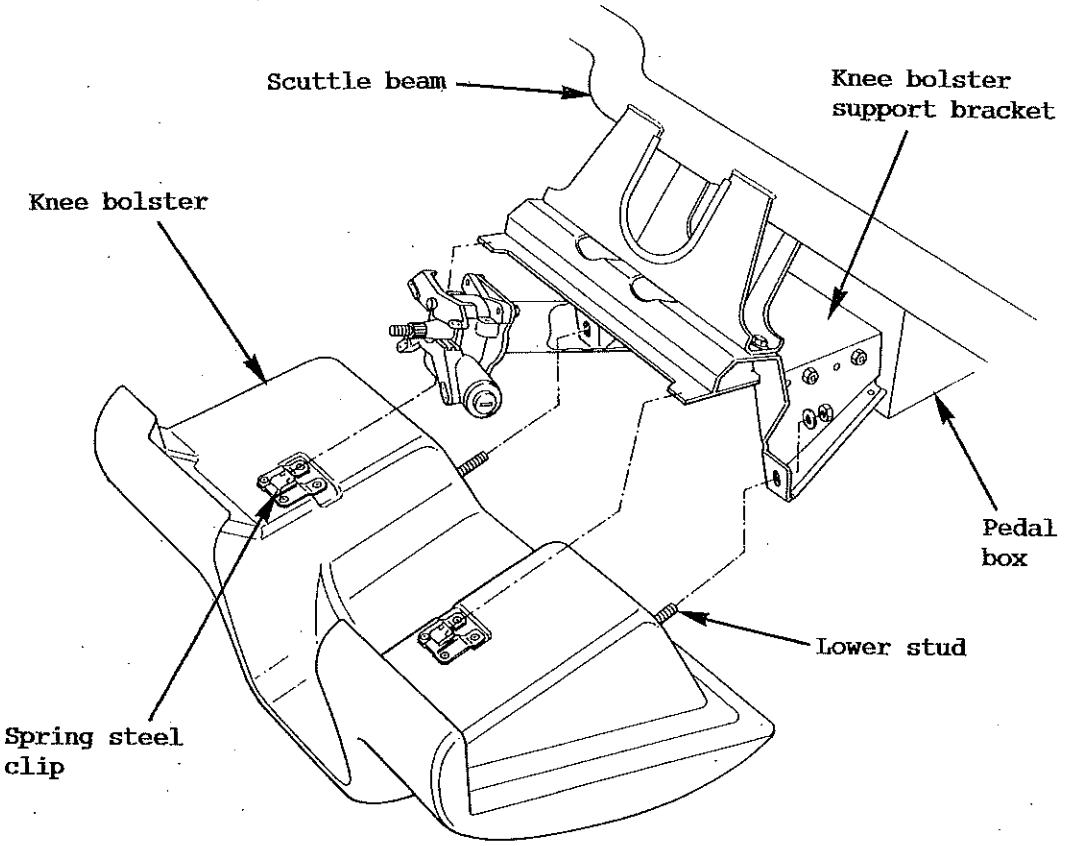

To remove the knee bolster, remove the two nuts from behind the vertical flanges (if necessary remove the logic module - one screw from beneath at front and rear), and pull the bolster rearwards to release the two spring clips. When re-fitting, ensure that both clips are fully engaged on the horizontal flange of the support bracket before fitting a flat washer and nyloc nut onto each of the lower fixings.

WB.3 - D RESISTOR MODULE

The resistor module is yellow in colour and is fitted on top of the knee bolster support bracket by three push fasteners, captive in the resistor housing.

WARNING: Before disconnecting or removing the resistor module, the following procedures must be followed in the order listed to temporarily disable the SIR system. Failure to follow this procedure could result in possible air bag deployment, personal injury, or unneeded SIR system repairs.

a) Turn off ignition.
b) Disconnect the negative battery cable, and tape back to ensure that it cannot contact the battery terminal.
c) From above the driver's footwell, remove the two SIR fuse holders from their housings, and remove the two 5A fuses.
d) Unplug the orange 3-way connector to the inflator module alongside the steering column and connect the steering column load tool T000T1035.

To unplug the connector from the resistor module, pull out the orange coloured Connector Positive Assurance (CPA) locking key, depress the tab and withdraw the plug. To remove the resistor module from the knee bolster bracket, depress the barbs on each of the three retaining pins in turn, and push the pins out of their holes.

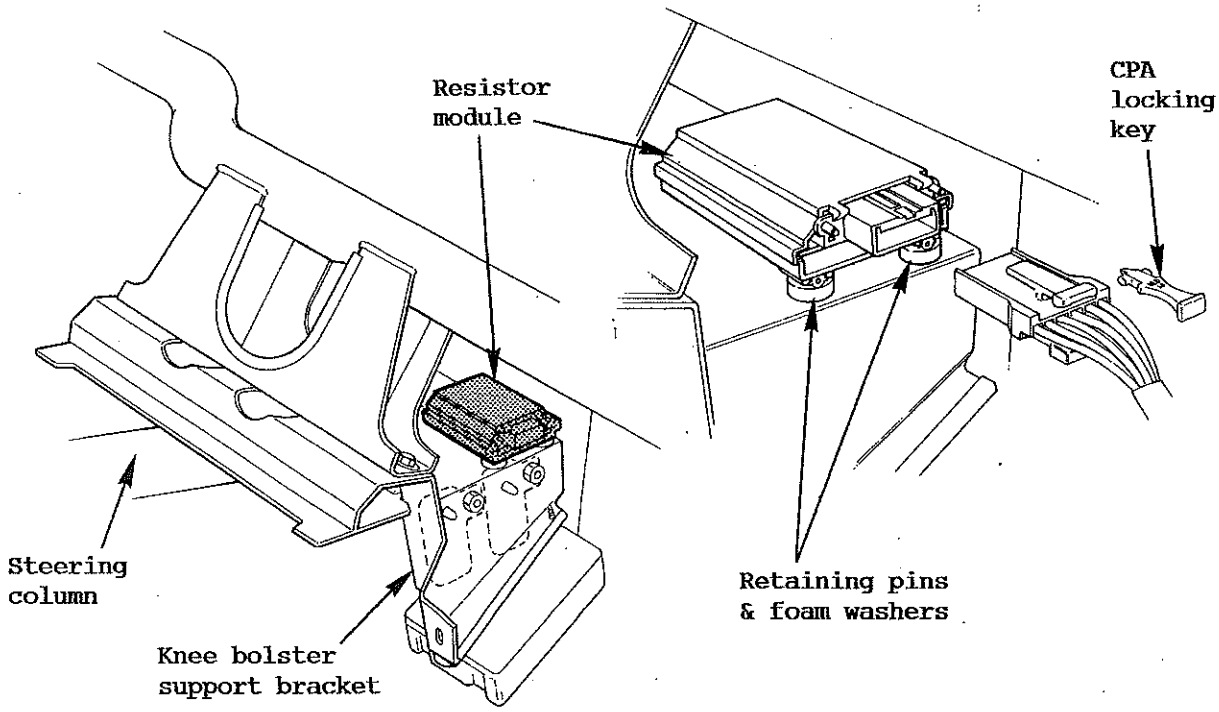

When re-fitting the module, first connect to the harness and always refit the CPA locking key. Check that the three foam washers are fitted on the retaining pins and press the pins into their holes.

WB.3 - E DIAGNOSTIC ENERGY RESERVE MODULE

The DERM is mounted on the bracing bracket between scuttle beam and centre tunnel, ahead of the fascia switch panel.

WARNING: Before disconnecting or removing the DERM, the following procedures must be followed in the order listed to temporarily disable the SIR system. Failure to follow this procedure could result in possible air bag deployment, personal injury, or unneeded SIR system repairs.

a) Turn off ignition.
b) Disconnect the negative battery cable, and tape back to ensure that it cannot contact the battery terminal.
c) From above the driver's footwell, remove the two SIR fuse holders from their housings, and remove the two 5A fuses.
d) Unplug the orange 3-way connector to the inflator module alongside the steering column and connect the steering column load tool T000T1035.

Access to the DERM is available only after removal of the instrument/switch panel. To remove the instrument/switch panel:

1. Remove the glovebox pivot pins, and glovebox. From the glovebox aperture, reach behind the radio unit and release the wing nut and washer securing the support bracket to the back of the set. Use the release forks to withdraw the radio unit, and disconnect the aerial lead, speaker harnesses, and power and earth leads.

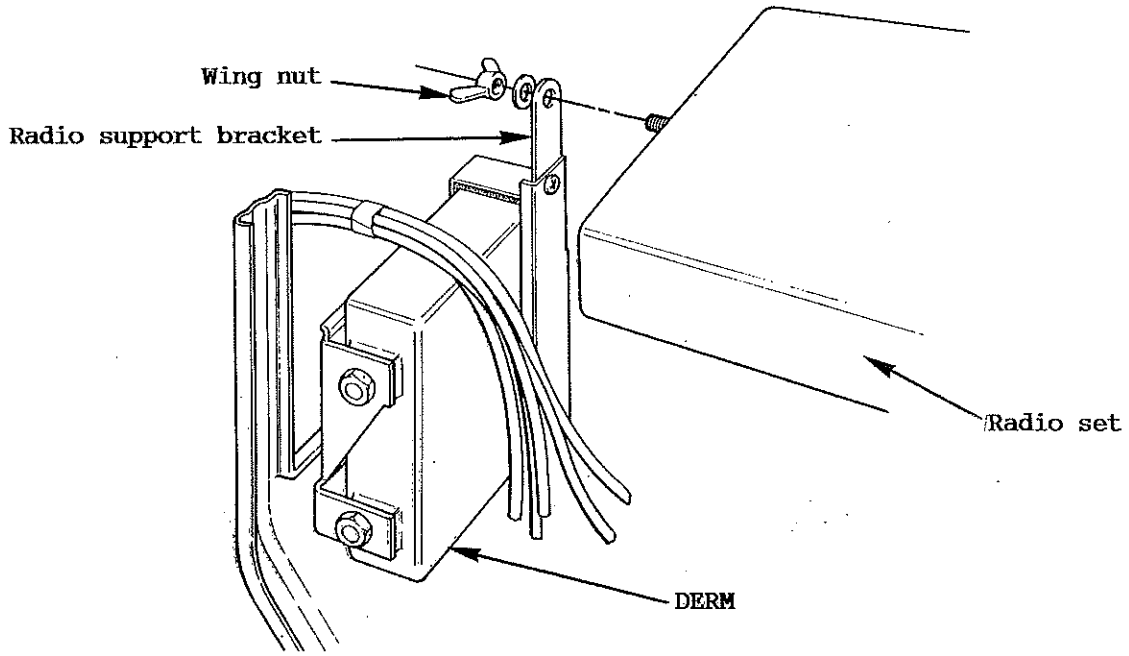

2. Reach behind the climate control panel, and unclip the temperature control link rod from the control quadrant. Also pull off the vacuum pipes connector plug from the rotary distribution control.

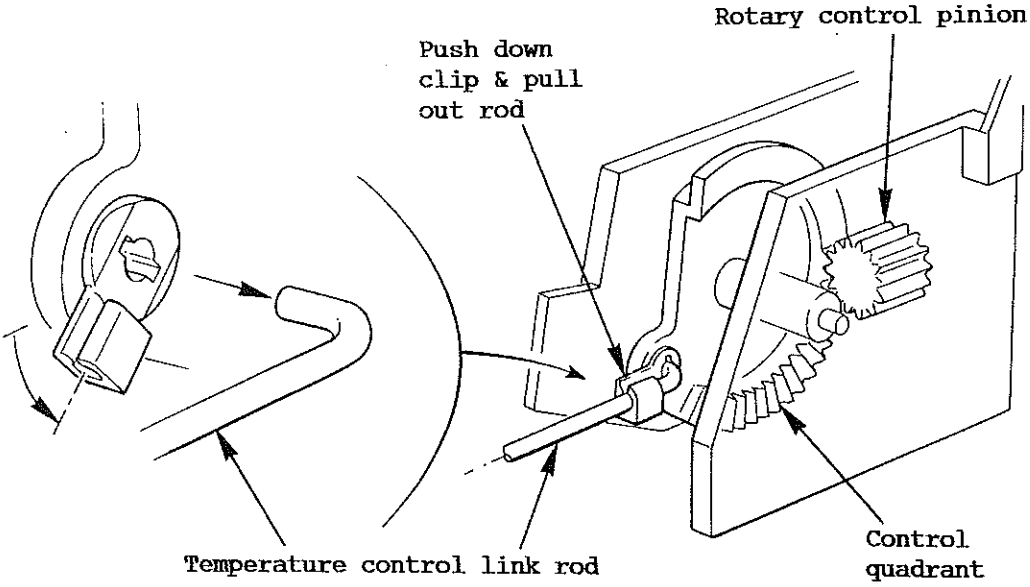

3. Remove the steering wheel (see sub-section WB.3 - J).

4. Remove the column shrouds. Press down the plastic tabs retaining the column switches, and slide the switches from their carrier bracket.

5. Release the two screws, and remove the instrument access panel from the top of the binnacle. Disconnect the speedo cable, and the three instrument/ switch harness connector blocks.

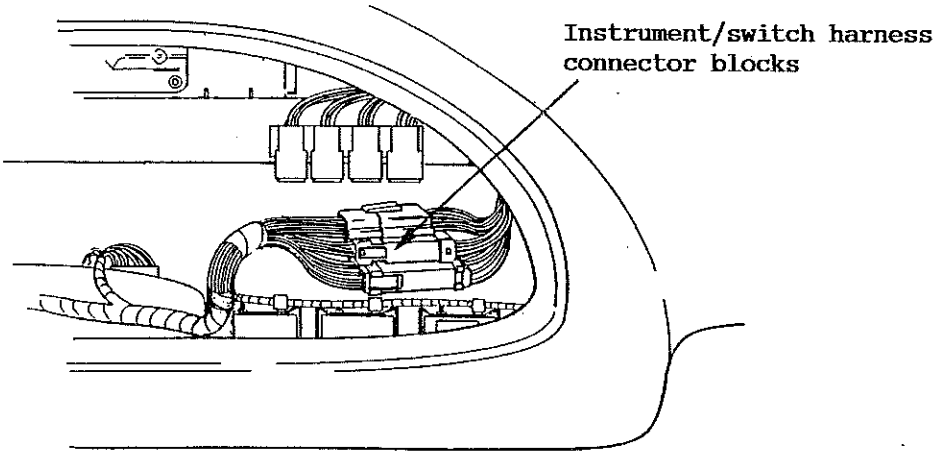

6. Remove the knee bolster (see sub-section WB.3 - C).

7. Release the seven fixings securing the fascia mask to the main fascia:

- From within the instrument cluster access aperture, remove the three screws (A) securing the top of the panel.
- Release the single screw fixing (B) from beneath the outboard end of the panel.
- Release the single screw fixing (C) from beneath the inboard end of the instrument panel.
- Remove the two blanking plugs from the fascia mask at the bottom LH corner, and above the cigar lighter, and release the two fixing screws (D) and (E).

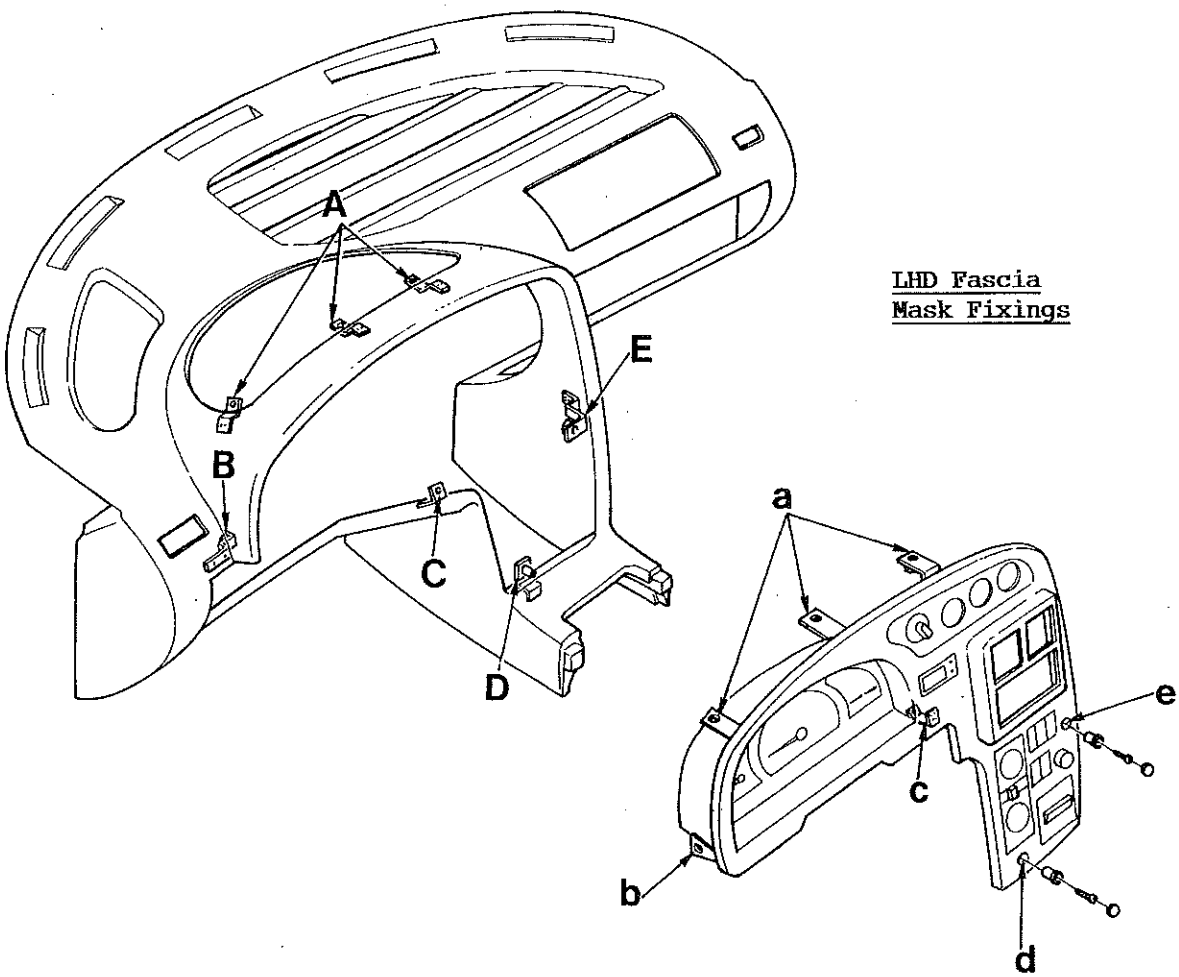

LHD Fascia
Mask Fixings

To unplug the DERM connector block, the orange coloured Connector Positive Assurance (CPA) locking must first be unclipped from the blue release catch. Use a small screwdriver inserted into the hole in the locking key to lever the tab from the release catch. Squeeze the release catch, and withdraw the connector from the DERM.

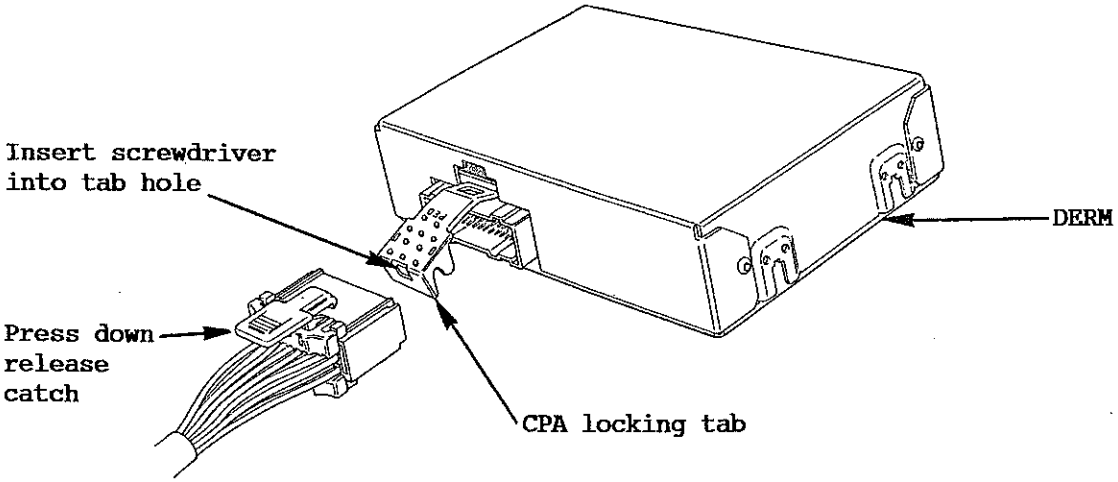

To remove the DERM, remove the two M4 nuts at the right hand side, slacken the left hand side nuts, and slide the module out of the mounting bracket slots.

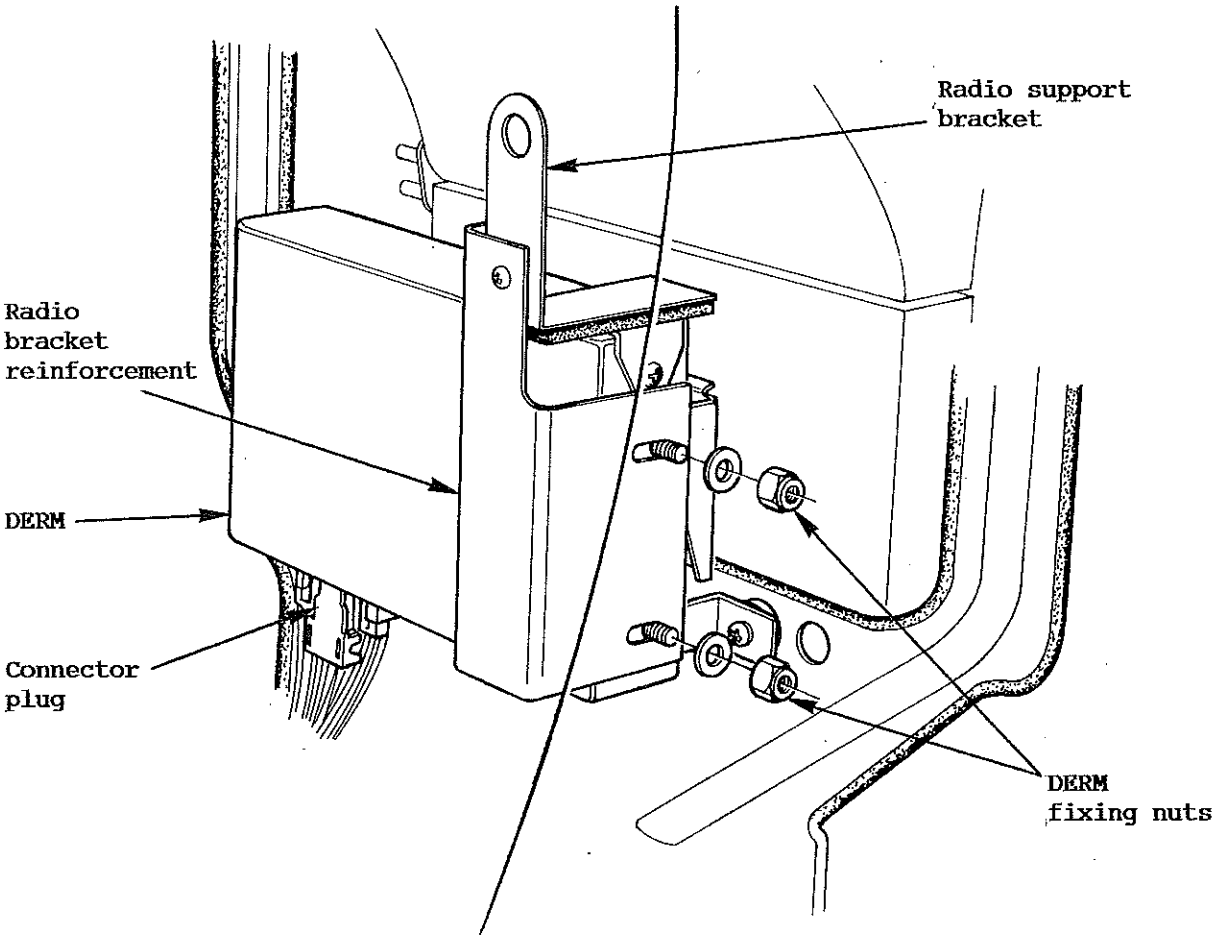

Refit the DERM with the electrical connector facing downwards, and tighten the four fixing nuts. Plug in the harness connector, and ensure that the CPA locking tab is fully clipped into position. Refit the fascia mask in the reverse order to removal.

Turn on the ignition, and check that the SIR tell tale flashes 7 to 9 times and then goes out. If this does not occur, refer to section WB.4 for diagnostic procedures.

WB.3 - F ARMING SENSOR

The arming sensor is mounted on the tunnel top ahead of the fascia mask switch panel. For fault diagnosis see Section WB.4. All sensors are specifically calibrated for each vehicle series and are keyed to the mounting brackets and SIR wiring harness. Caution should be used to assure proper location of the sensors to their mounting brackets. The keying of the sensors to their mounting brackets and wiring harness should never be modified other than by the manufacturer.

WARNING: Exercise great care when handling a sensor. Striking or jarring a sensor could cause the air bag to deploy and result in personal injury or improper operation of the SIR system. All sensors and mounting brackets must be

securely fixed to assure proper operation. Never power up the SIR system when any sensor is not rigidly attached to the vehicle since the sensor is easily activated when not attached, and could result in deployment.

The following procedures must be followed in the order listed to temporarily disable the SIR system and prevent false diagnostic codes from setting. Failure to follow this procedure could result in possible air bag deployment, personal injury, or unneeded SIR system repairs.

a) Turn off ignition.
b) Disconnect the negative battery cable, and tape back to ensure that it cannot contact the battery terminal.
c) From above the driver's footwell, remove the two SIR fuse holders from their housings, and remove the two 5A fuses.
d) Unplug the orange 3-way connector to the inflator module alongside the steering column and connect the steering column load tool T000T1035.

Access to the arming sensor is available only after removal of the instrument/switch panel (see sub-section WB.3 - E).

To unplug the connector block, first pull out the orange coloured Connector Positive Assurance (CPA) locking key, before depressing the retaining barb and withdrawing the plug. To remove the sensor, release the two M4 nyloc nuts and washers, the studs for which are welded to a studplate secured to the underside of the body.

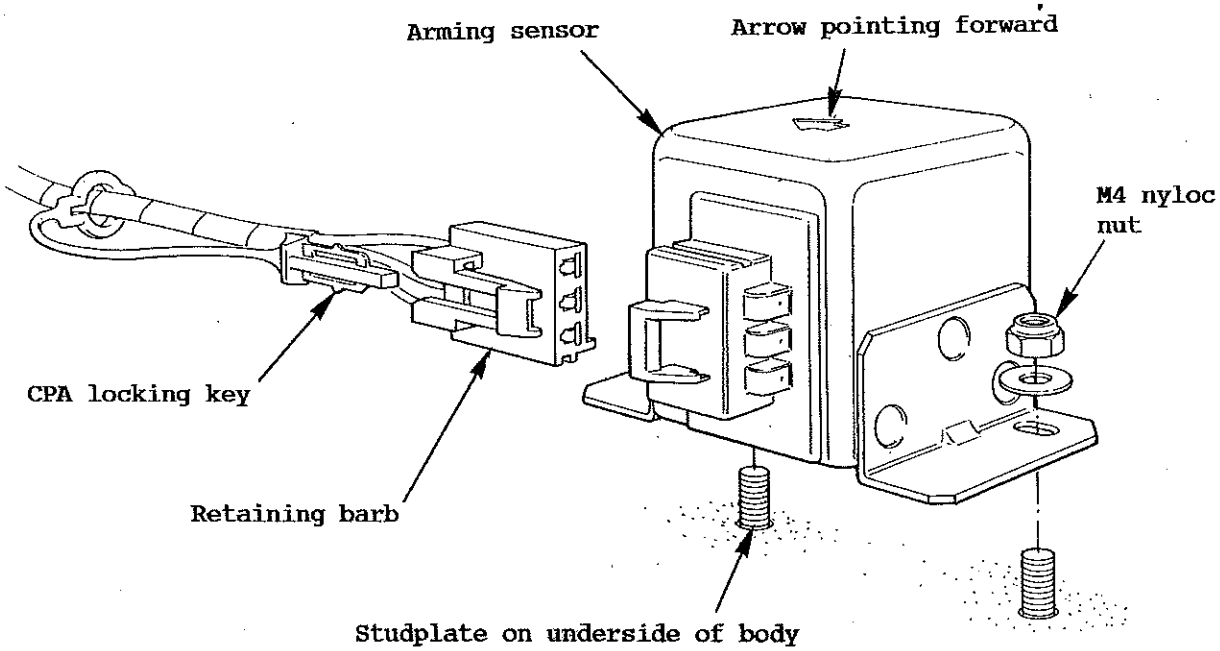

WARNING: Proper operation of the sensors and SIR system requires that any repairs to the vehicle structure return it to its original production configuration. Deployment (Current Code 51) or any visible damage to the sensors and/or their mounting brackets requires replacement, not repair.

Proper operation of the arming sensor requires that the sensor be rigidly attached to the tunnel top with its two M4 fixing nuts and washers. The arrow on the top of the sensor body must be pointing towards the front of the vehicle, with the connector socket on the left hand side.

Check that the stud plate is secure before refitting the arming sensor over the two studs with the arrow on the top of the sensor pointing forwards, and the electrical connector on the left hand side. Fit the two flat washers and new M4 nyloc nuts, and tighten securely. Plug in the electrical connector and ensure that the CPA locking key is inserted fully.

Refit the instrument/switch panel (fascia mask) in the reverse order to removal. Turn on the ignition and check that the SIR tell tale flashes 7 to 9 times and then goes out. If this does not occur, refer to section WB.4 for diagnostic procedures.

WB.3 - G PASSENGER COMPARTMENT DISCRIMINATING SENSOR

The passenger compartment discriminating sensor is mounted via a bracket to the tunnel top, between the arming sensor and the scuttle beam brace. For fault diagnosis see Section WB.4. All sensors are specifically calibrated for each vehicle series and are keyed to the mounting brackets and SIR wiring harness. Caution should be used to assure proper location of the sensors to their mounting brackets. The keying of the sensors to their mounting brackets and wiring harness should never be modified other than by the manufacturer.

WARNING: Exercise great care when handling a sensor. Striking or jarring a sensor could cause the air bag to deploy and result in personal injury or improper operation of the SIR system. All sensors and mounting brackets must be securely fixed to assure proper operation. Never power up the SIR system when any sensor is not rigidly attached to the vehicle since the sensor is easily activated when not attached, and could result in deployment.

The following procedures must be followed in the order listed to temporarily disable the SIR system and prevent false diagnostic codes from setting. Failure to follow this procedure could result in possible air bag deployment, personal injury, or unneeded SIR system repairs.

a) Turn off ignition.
b) Disconnect the negative battery cable, and tape back to ensure that it cannot contact the battery terminal.
c) From above the driver's footwell, remove the two SIR fuse holders from their housings, and remove the two 5A fuses.
d) Unplug the orange 3-way connector to the inflator module alongside the steering column and connect steering column load tool T000T1035.

Access to the passenger compartment discriminating sensor is available only after removal of the instrument/switch panel (see sub-section WB.3 - E).

To unplug the connector block, first pull out the orange coloured Connector Positive Assurance (CPA) locking key, before depressing the retaining barb and withdrawing the plug. To remove the sensor, release the two M6 nyloc nuts and washers, and lift the sensor off the studs. The two studs are welded to a levelling plate itself bolted to the tunnel top by four nyloc nuts.

WARNING: Proper operation of the sensors and SIR system requires that any repairs to the vehicle structure return it to its original production configuration. Deployment (Current Code 51) or any visible damage to the sensors and/or their mounting brackets requires replacement, not repair.

Proper operation of the passenger compartment discriminating sensor requires that the sensor be rigidly attached to the tunnel top with its two M6 fixing nuts and washers. The arrow on the top of the sensor body must be pointing towards the front of the vehicle, with the harness entry at the rear.

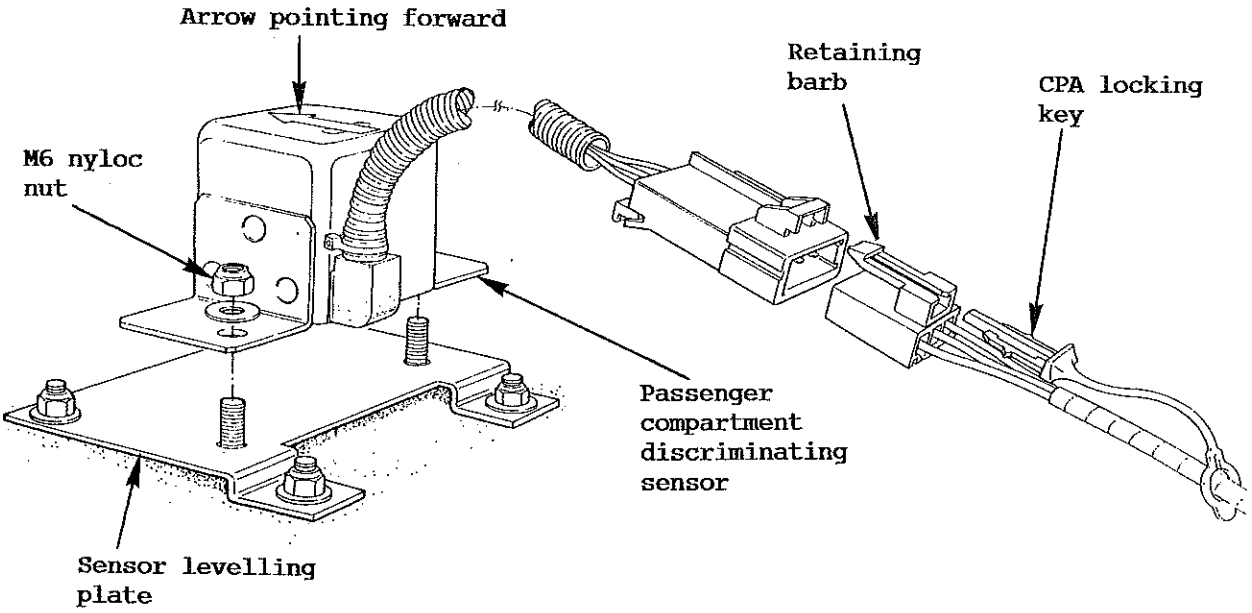

Check that the stud plate is secure before refitting the passenger compartment discriminating sensor over the two studs with the arrow on the top of the sensor pointing forwards, and the harness leads emerging from the rear. Fit the two flat washers and new M6 nyloc nuts, and tighten securely. Plug in the harness connector and ensure that the CPA locking key is inserted fully.

Refit the instrument/switch panel (fascia mask) in the reverse order to removal. Turn on the ignition and check that the SIR tell tale flashes 7 to 9 times and then goes out. If this does not occur, refer to section WB.4 for diagnostic procedures.

WB.3 - H FORWARD DISCRIMINATING SENSOR

The forward discriminating sensor is bolted to a bracket on the chassis front frame, beneath the centre front edge of the front topshell. The sensor has an integral lead which is routed along the front of the engine bay to a harness connector block behind the left hand headlamp pod. For fault diagnosis see Section WB.4.

All sensors are specifically calibrated for each vehicle series and are keyed to the mounting brackets and SIR wiring harness. Caution should be used to assure proper location of the sensors to their mounting brackets. The keying of the sensors to their mounting brackets and wiring harness should never be modified other than by the manufacturer.

WARNING: Exercise great care when handling a sensor. Striking or jarring a sensor could cause the air bag to deploy and result in personal injury or improper operation of the SIR system. All sensors and mounting brackets must be securely fixed to assure proper operation. Never power up the SIR system when any sensor is not rigidly attached to the vehicle since the sensor is easily activated when not attached, and could result in deployment.

The following procedures must be followed in the order listed to temporarily disable the SIR system and prevent false diagnostic codes from setting. Failure to follow this procedure could result in possible air bag deployment, personal injury, or unneeded SIR system repairs.

a) Turn off ignition.
b) Disconnect the negative battery cable, and tape back to ensure that it cannot contact the battery terminal.
c) From above the driver's footwell, remove the two SIR fuse holders from their housings, and remove the two 5A fuses.
d) Unplug the orange 3-way connector to the inflator module alongside the steering column and connect steering column load tool T000T1035.

Access to the forward discriminating sensor harness connector for diagnostic purposes, is available behind the left hand headlamp pod. To unplug the connector block, first pull out the orange coloured Connector Positive Assurance (CPA) locking key, before depressing the retaining barb and withdrawing the plug.

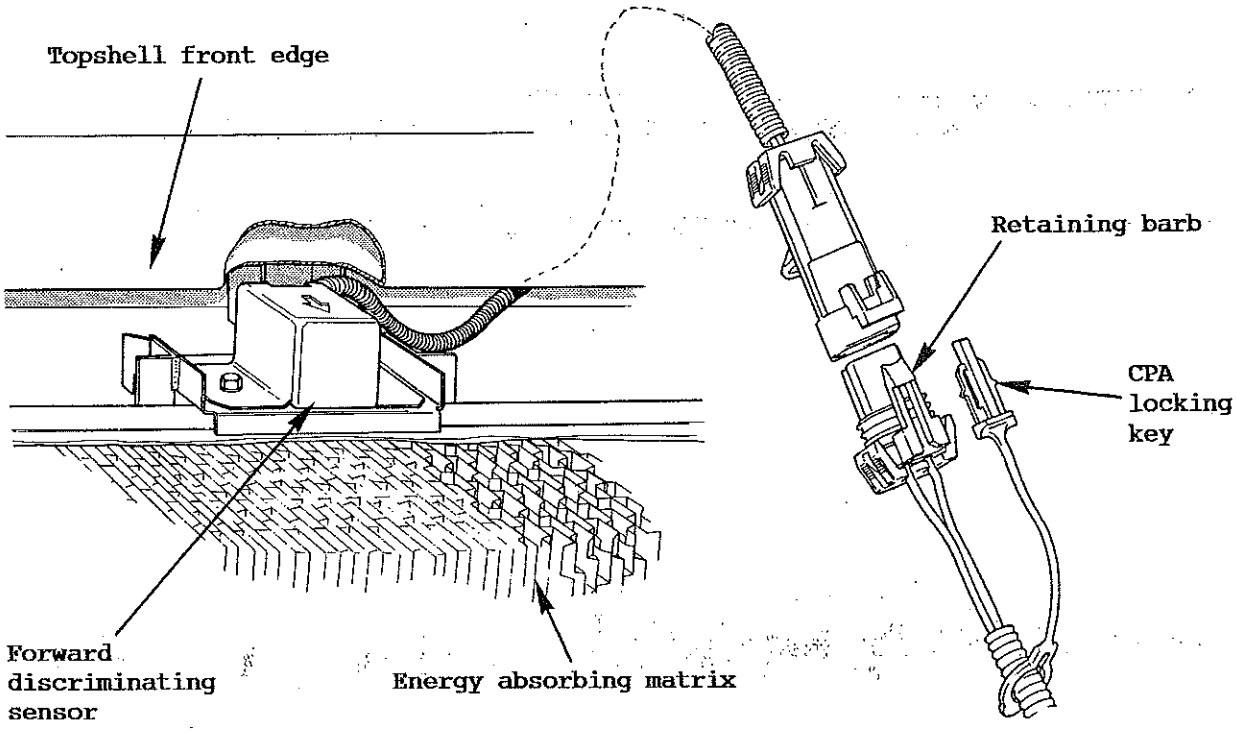

For access to the sensor itself, it is necessary to remove the front bumper:

1. Release the fixings securing the lower edge of the spoiler to the front undershield and radiator ducts.

2. Release the front of the wheel arch liners to permit access to the bumper rear end fixings. At each side, remove the two M6 screws securing captive nuts in the ends of the bumper armature, to the rear ends of the radiator ducts.

3. For access to the two lowermost bumper main fixing nuts, pull out the access grommet from the underside of the spoiler at each side, and reach up to the M8 fixing nut behind the flange on the chassis front frame.

4. The two top fixings for the bumper are accessible at the front of the headlamp recesses with the pods raised.

5. Withdraw the bumper assembly sufficiently to disconnect the park/turn and side marker lamp harnesses.

6. Remove the two M6 setscrews securing the forward sensor to the chassis, and withdraw the sensor.

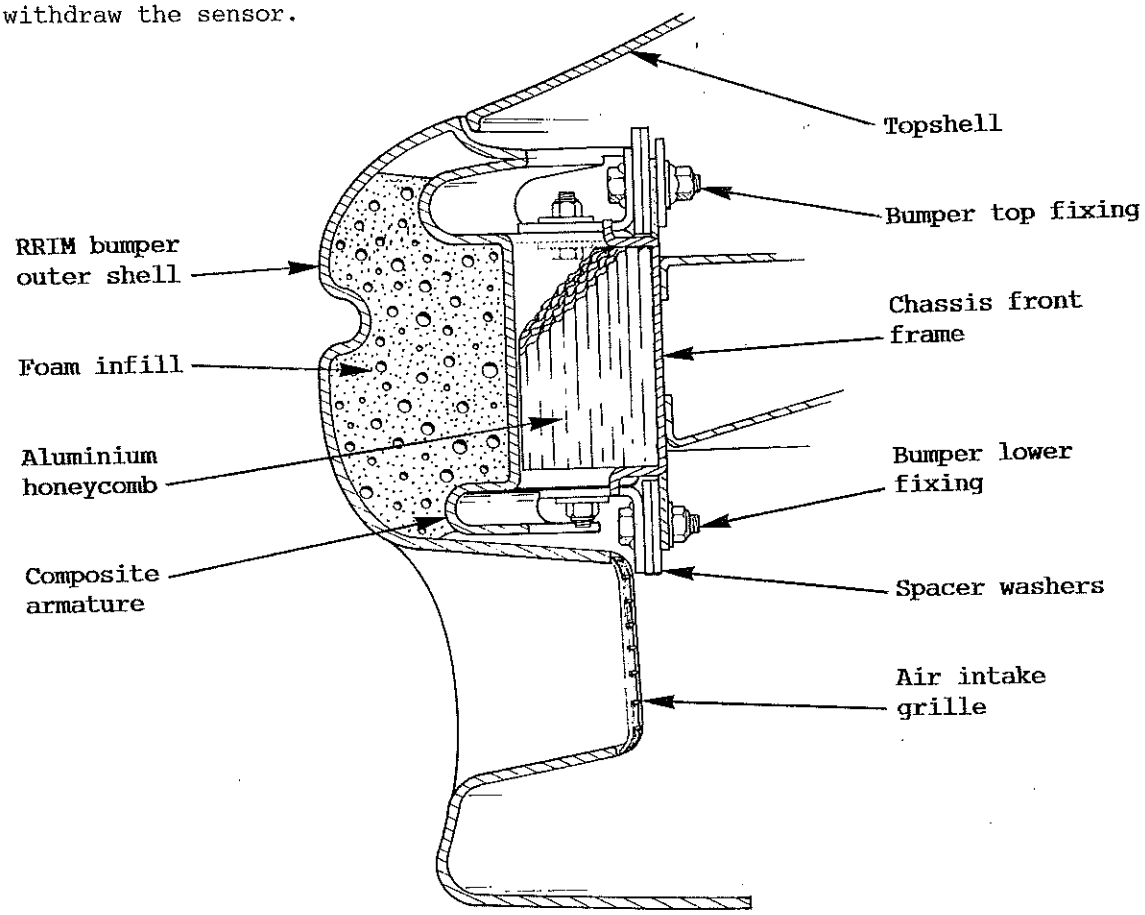

WARNING: Proper operation of the sensors and SIR system requires that any repairs to the vehicle structure return it to its original production configuration. Deployment (Current Code 51) or any visible damage to the sensors and/or their mounting brackets requires replacement, not repair.

Proper operation of the forward discriminating sensor requires that the sensor be rigidly attached to the chassis front frame with its two M6 setscrews and washers. The arrow on the top of the sensor body must be pointing towards the front of the vehicle, with the harness entry at the rear.

Refit the forward discriminating sensor to the chassis front frame, with the arrow on the sensor body pointing forwards and the harness entry at the rear. Secure with the two M6 setscrews and washers. Fit the sensor lead into the harness retaining clips, and plug into the connector block behind the left hand headlamp pod. Ensure that the CPA locking key is fully inserted.

Turn on the ignition and check that the SIR tell tale flashes 7 to 9 times, and then goes out. If this does not occur, refer to section WB.4 for diagnostic procedures.

Refit the bumper assembly using spacer plates or body washers on the four main fixing bolts in order to achieve correct alignment (5mm gap) with the topshell front edge. Reverse the bumper removal procedure and tighten all fixings.

WB.3 - I INFLATOR MODULE

The inflator module is housed in the hub of the steering wheel, and incorporates the hinged trim cover. For fault diagnosis see section WB.4.

WARNING: Safety precautions must be observed when handling a deployed inflator module. After deployment, the air bag surface may contain a white packing powder used to ease deployment, together with a small amount of sodium hydroxide dust, a by-product of the sodium azide reaction during deployment that can be irritating to the skin if left on for an extended period of time. Always wear gloves and safety glasses when handling a deployed inflator module, and wash your hands with a mild soap and water afterwards.

WARNING: The following procedures must be followed in the order listed to temporarily disable the SIR system and prevent false diagnostic codes from setting. Failure to follow this procedure could result in possible air bag deployment, personal injury, or unneeded SIR system repairs.

a) Turn off ignition.
b) Disconnect the negative battery cable, and tape back to ensure that it cannot contact the battery terminal.
c) From above the driver's footwell, remove the two SIR fuse holders from their housings, and remove the two 5A fuses.
d) Unplug the orange 3-way connector to the inflator module alongside the steering column and connect the steering column load tool T000T1035.

To remove the inflator module:

1. The connector block between the SIR harness the steering column coil assembly is located alongside the steering column, near the bottom edge of the knee bolster. Unplug the connector by first prising open the Connector Positive Assurance (CPA) hinged locking tab at the side of the connector, and then pressing the release pad and pulling the connector apart.

2. Use a no. 25 Torx driver or equivalent to remove the four screws in the underside side of the steering wheel, securing the inflator module.

3. Withdraw the inflator module sufficiently to enable the connector block to be unplugged. Unplug the connector by first prising open the Connector Positive Assurance (CPA) hinged locking tab at the side of the connector, and then pressing the release pad and pulling the connector apart.

WARNING: When carrying a live inflator module, make sure the bag and trim cover are pointed away from you. In case of an accidental deployment, the bag will then deploy with minimal chance of injury. When placing a live inflator module on a bench or other surface, always face the bag and trim cover up, away from the surface. This is necessary so that a free space is provided to allow the air bag to expand in the unlikely event of accidental deployment. Otherwise personal injury may result. Also never carry the inflator module by the wires or connector on the underside of the module. Do not use or attempt to repair a damaged inflator module, and NEVER apply any electrical power to the module except as specified in the diagnostic procedures.

WARNING: Failure to follow proper SIR inflator module disposal procedures can result in air bag deployment which may cause personal injury. Undeployed inflator modules must not be disposed of through normal refuse channels. The undeployed inflator module contains substances that can cause severe illness or

personal injury if the sealed container is damaged during disposal. Disposal in any manner inconsistent with proper procedures may be a violation of federal, state and/or local laws.

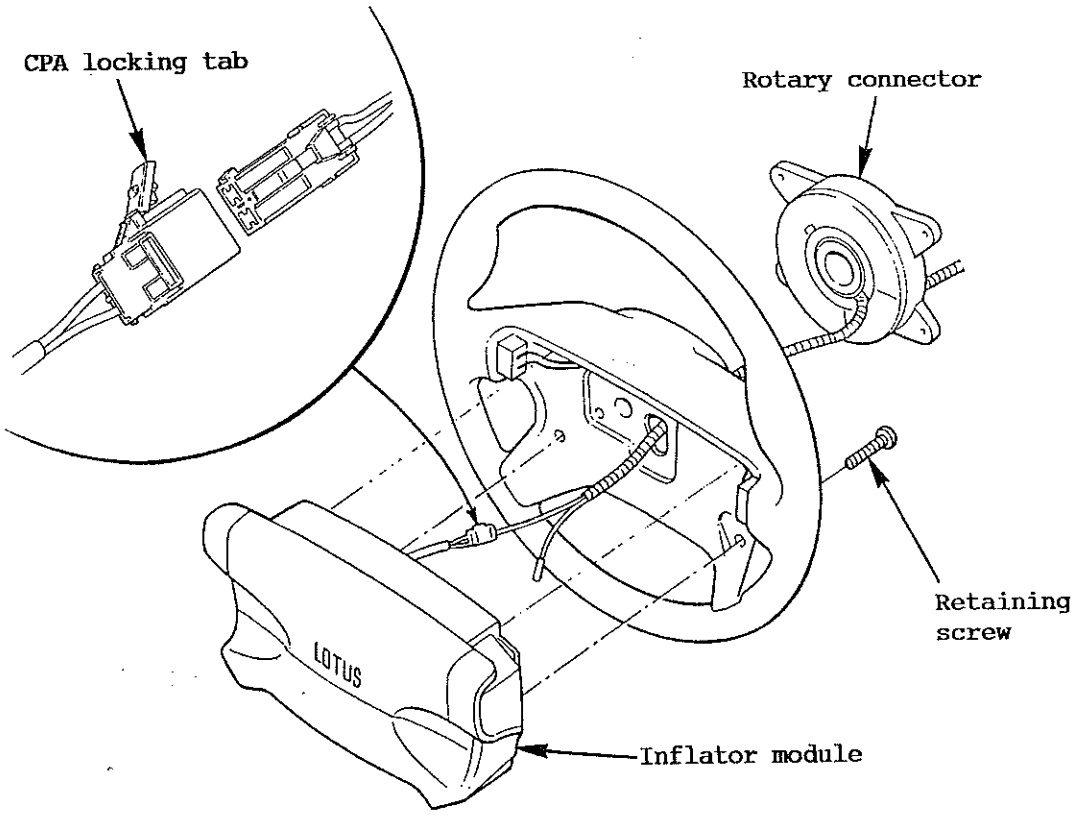

To refit the inflator module:

1. Plug in the module connector block and secure by clipping in the CPA locking tab at the side of the connector block.

2. Check that the horn button wiring connector is joined before fitting the module into position in the steering wheel and retaining with the four Torx screws. Torque tighten the four screws to 2.8 Nm (25 lbf.in).

3. Plug in the column coil assembly connector block at the base of the steering column, and secure by clipping in the CPA locking tab at the side of the connector block

4. Refit the two 5A SIR fuses above the driver's footwell, and reconnect the battery.

5. Turn on the ignition and check that the SIR tell tale flashes 7 to 9 times and then goes out. If this does not occur, refer to section WB.4 for diagnostic procedures.

WB.3 - J STEERING WHEEL

The steering wheel is connected to the column by a spline and short taper, and is retained by a single nut and washer.

To remove the steering wheel:

1. Remove the inflator module. See sub-section WB.3 - I.

2. Disconnect the horn buttons connector block.

3. Set the front wheels in the straight ahead position. Use a 19 mm socket wrench to remove the steering wheel retaining nut from the column. Remove the flat washer. Mark the relative positions of the wheel hub and column to aid refitting.

4. Pull the wheel off the column using minimum force. If necessary, pull up on the steering wheel and lightly tap the end of the inner column using a copper mallet, but **DO NOT EXCEED A FORCE OF 2.2 kN (500 lbf)**, or the mechanism retaining the telescopic length of the column may be overridden, necessitating column replacement.

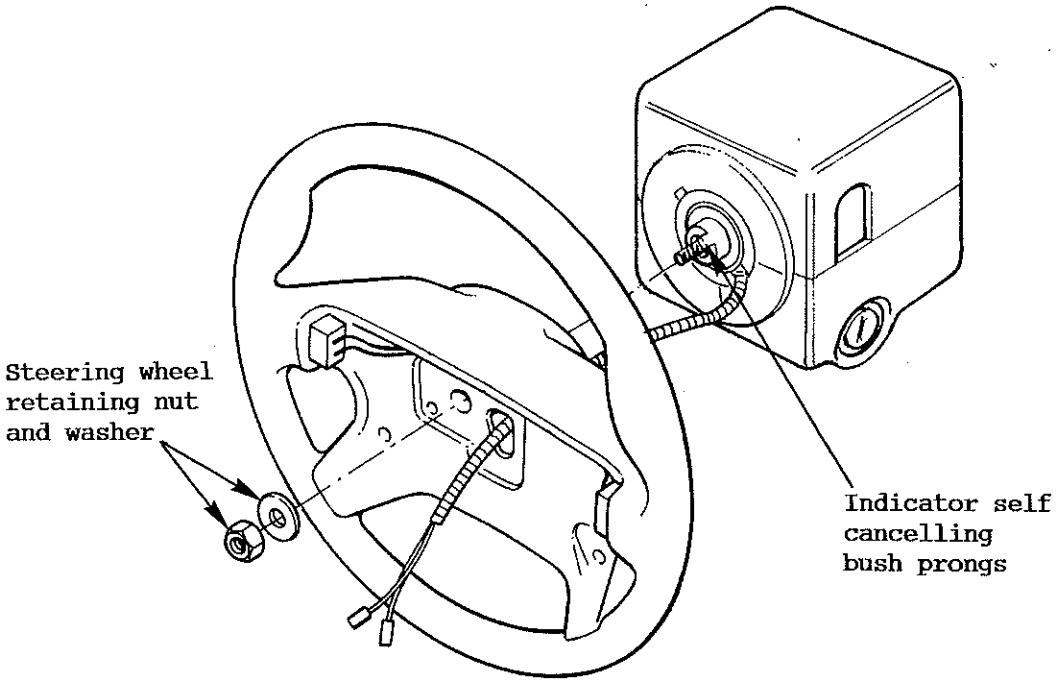

To refit the steering wheel:

1. Check that the front wheels are in the straight ahead position.

2. Turn the rotary connector (fitted to the top end of the steering column) until the 'Neutral' arrow is aligned with the yellow line at the bottom of the rotary connector. The wires should now exit the connector at the 12 O'clock position. Turn the rotary connector clockwise until the wires are at 4 O'clock.

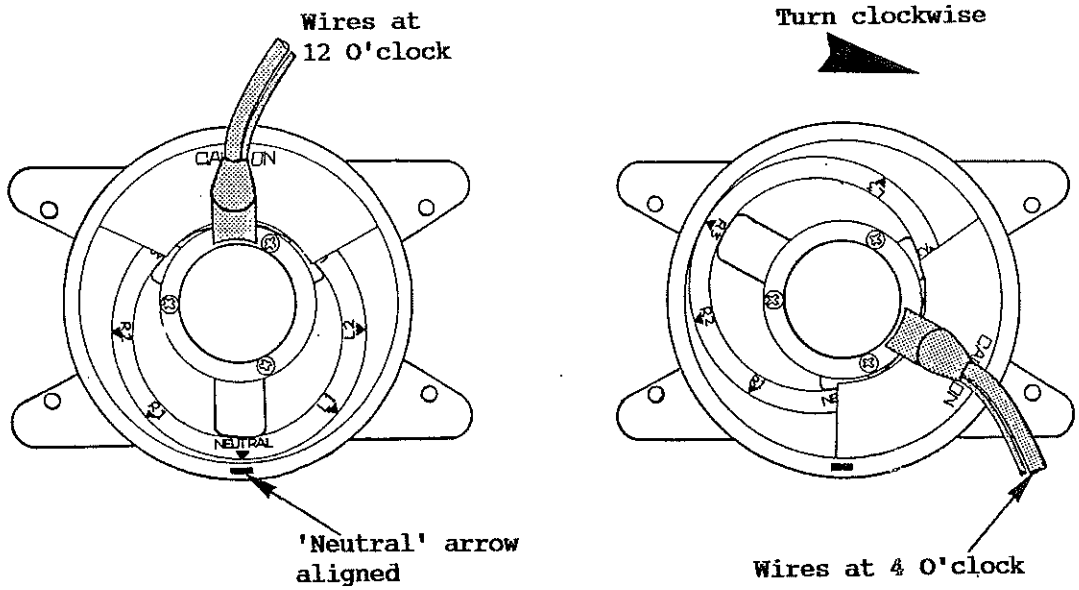

3. Fit the steering wheel to the column:
   - apply a small amount of PBC grease to the splines and taper of the inner column, to aid subsequent steering wheel removal, but ensure that the **threads of the column are thoroughly degreased;**
   - feed the horn and inflator module wires through the large hole in the steering wheel boss;
   - ensure that the two fingers of the rotary connector drive/turn switch self cancelling bush are engaged in the holes in the steering wheel boss;
   - align the reference marks made on disassembly (if applicable).

4. If no wheel to column reference marks were available, before fitting the steering wheel retention nut, check the steering wheel alignment as follows:
   - rotate the steering wheel to full right hand lock and note the position of the steering wheel;
   - rotate the wheel to full left hand lock and check that the steering wheel position is the mirror image of that at right hand lock;
   - if the positions do not correspond, remove the wheel and reposition on the column as necessary, repeating operation (3).

5. Fit the flat washer and nyloc half nut to the column, and torque tighten to 34 Nm (25 lbf.ft).

6. Reconnect the horn buttons lead, and refit the inflator module. See sub-section WB.3 - I.

WB.3 - K ROTARY CONNECTOR

The rotary connector fits between the steering wheel and column, and allows the steering wheel to turn whilst maintaining electrical continuity to the inflator module. For fault diagnosis see section WB.4.

WARNING: The following procedures must be followed in the order listed to temporarily disable the SIR system and prevent false diagnostic codes from setting. Failure to follow this procedure could result in possible air bag deployment, personal injury, or unneeded SIR system repairs.

a) Turn off ignition.
b) Disconnect the negative battery cable, and tape back to ensure that it cannot contact the battery terminal.
c) From above the driver's footwell, remove the two SIR fuse holders from their housings, and remove the two 5A fuses.
d) Unplug the orange 3-way connector to the inflator module alongside the steering column and connect the steering column load tool T000T1035.

To remove the rotary connector:

1. Remove the knee bolster (sub-section WB.3 - C), inflator module (sub-section WB.3 - I), and steering wheel (sub-section WB.3 - J).

2. Remove the steering column shroud:
   - Remove the two screws from beneath the steering wheel end of the shroud;
   - Remove the single screw each side joining the top and bottom shrouds;
   - Withdraw the two halves of the shroud.

3. Release the four screws securing the rotary connector to the column top bearing housing, and withdraw the connector assembly with its lead. Remove the connector drive/turn switch self cancelling bush from the inside of the rotary connector.

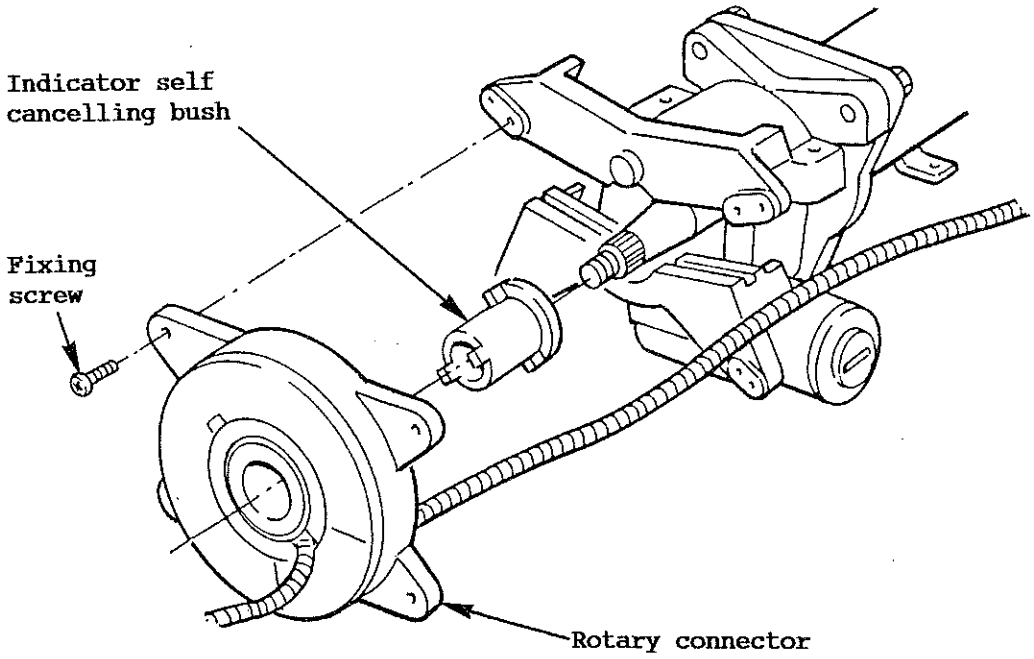

Refit the rotary connector in the reverse order to disassembly, not forgetting to fit the connector drive/turn switch self cancelling bush. Pay particular attention to the centring of the rotary connector before fitting the steering wheel, or the wires inside the connector will be broken.

WB.3 - L STEERING COLUMN ASSEMBLY

After the vehicle has been involved in an accident, whether or not involving air bag deployment, the steering column should be carefully inspected, and replaced if any telescoping has occurred. Perform the following checks:

1. Outer column:
   - Measure the length of the lower part of the outer column as shown in the diagram. Specification = 105.4 ± 1 mm
   If outside specification, replace the column assembly.

   - Remove the column shrouds, loosen the column to scuttle beam fixing bolts and check that the two alloy 'break out' inserts are securely attached to the column flange.

2. Inner column:
   - Check that the centreline of the u/j at the lower end of the column is within 3 mm of the pivot point of the outer column lower bracket. If greater than 3 mm, replace the column assembly.

   - Measure the overall length of the inner column.
   Specification = 612 ± 0.8 mm

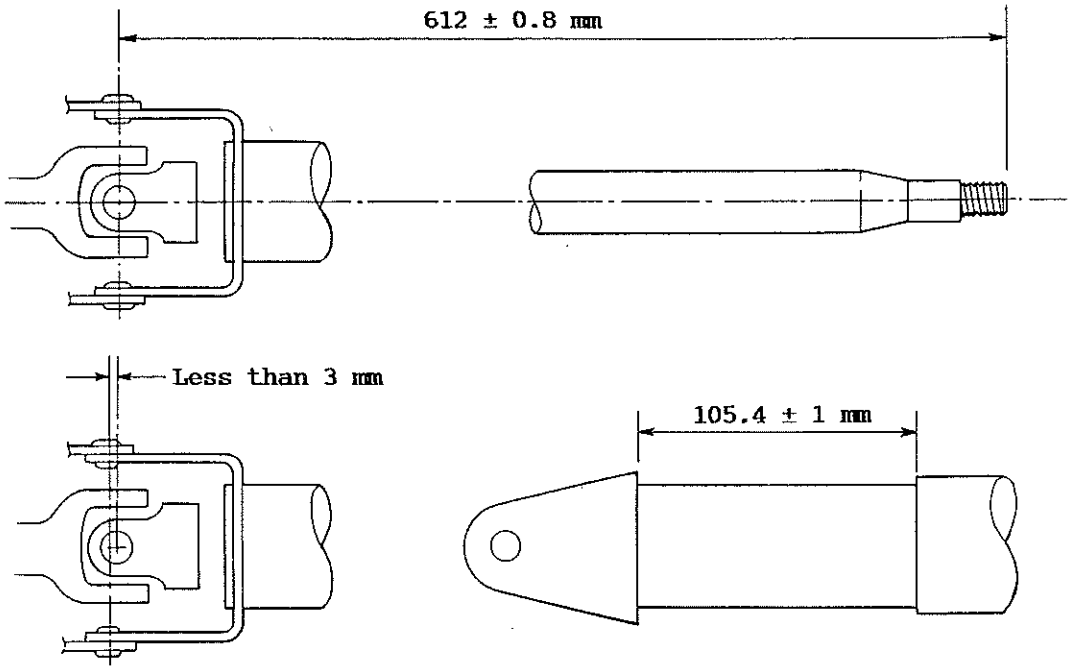

To remove upper steering column assembly:

1. Remove the knee bolster. See sub-section WB.3 - C.

2. Remove the steering wheel. See sub-section WB.3 - J.

3. Remove the inflator module. See sub-section WB.3 - I.

4. Remove the rotary connector. See sub-section WB.3 - K.

5. Unplug the block connectors and release the harnesses for the column switches. Depress the retaining prongs, and slide out the column switches from the column top bearing carrier. Release the small grub screw at the bottom left hand rear of the steering lock body, and pull out the ignition switch.

6. If necessary, remove the steering lock mechanism either by unscrewing the two shear bolts using a hammer and punch, or by drilling out the bolt heads.

7. At the bottom end of the column, remove the pinch bolt securing the upper universal joint to the intermediate shaft, and remove the two bolts securing the column lower mounting bracket to the pedal box.

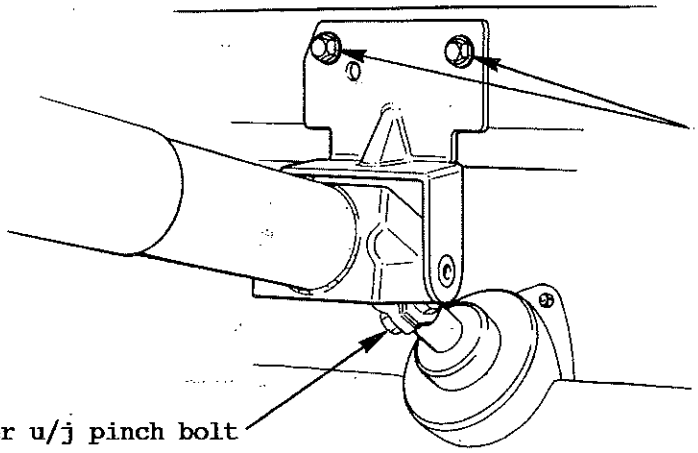

8. Remove the two bolts securing the top end of the column to the knee bolster/ column support bracket, and withdraw the column assembly from the intermediate shaft.

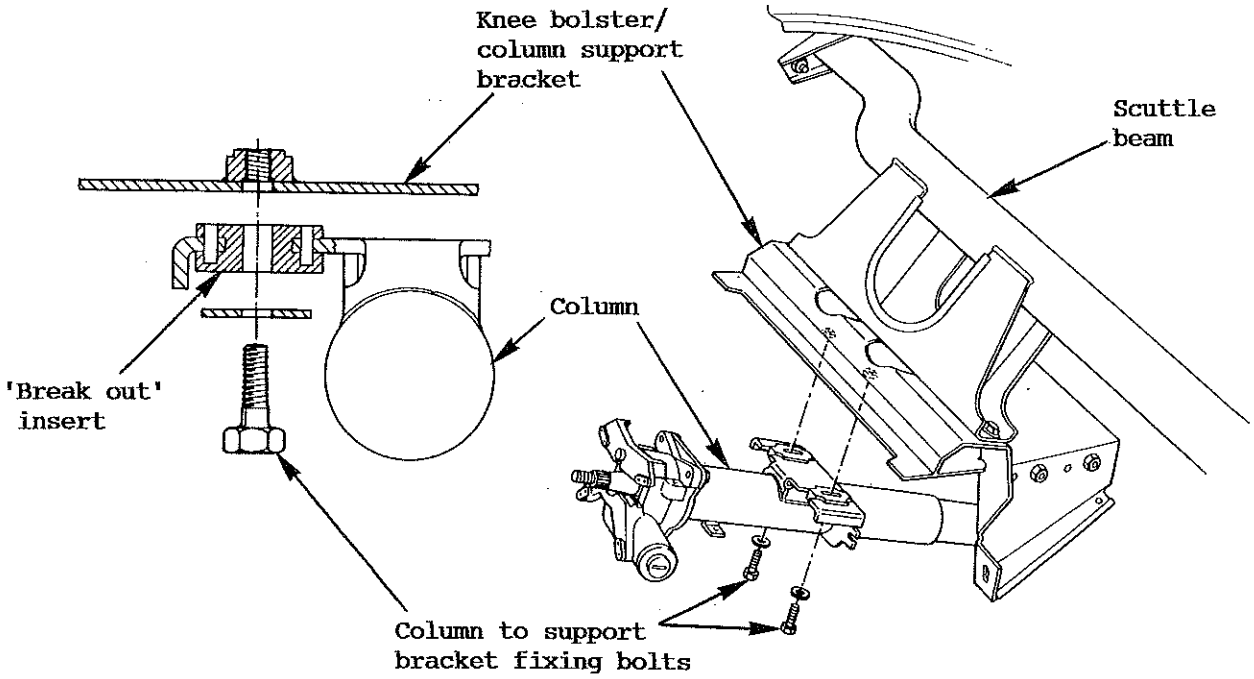

9. To remove the inner column, remove the circlip from the top end of the column, followed by the cushion ring, and withdraw the inner column from the bottom end of the outer column.

10. If necessary, remove the three bolts securing the top bearing housing to the outer column. Remove the circlip, and press out the ball bearing assembly.

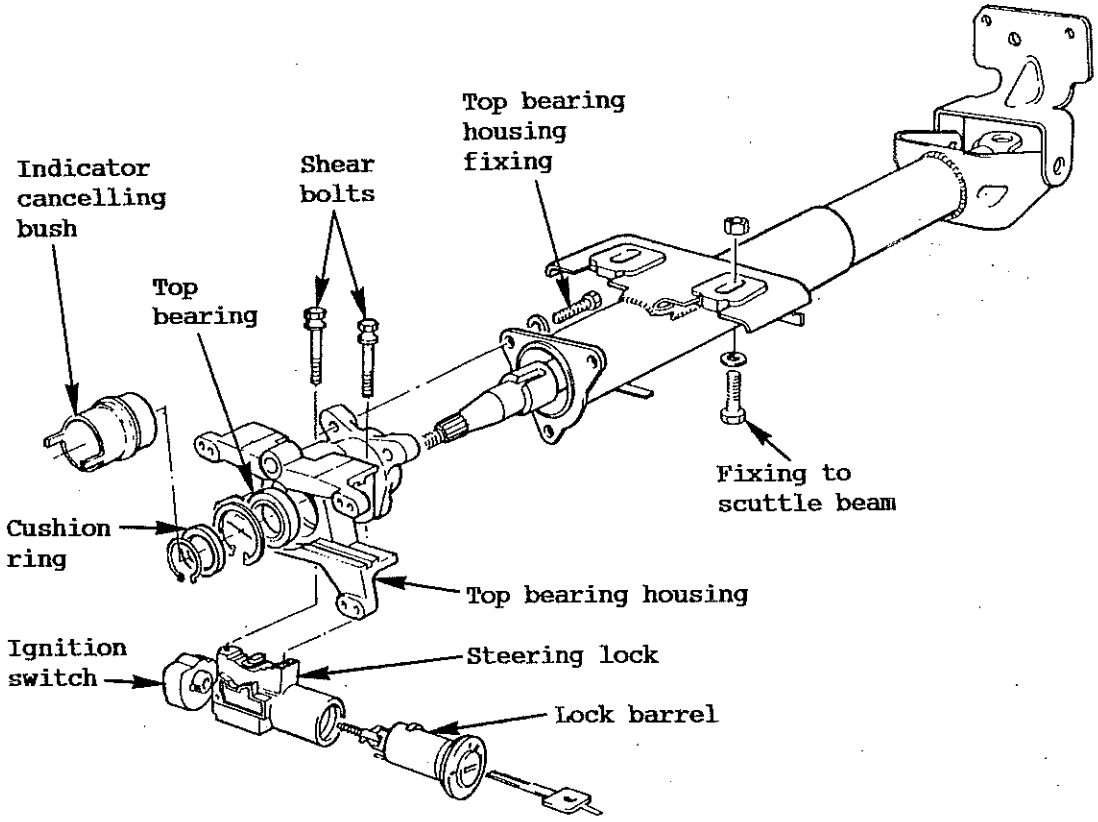

To reassemble/refit upper column assembly:

1. Fit the ball bearing into the top bearing housing using a press, and fit the retaining circlip. Fit the bearing housing to the top of the column, and retain with the three M6 setscrews and spring washers. Tighten the three screws.

2. Fit the inner column into the outer, and fit the cushion ring over the top end, followed by the retaining circlip.

3. Fit the upper column assembly into position, feeding the intermediate shaft into the upper column u/j, noting that this can be assembled in only one orientation, with the 'flat' aligned with the u/j pinch bolt. Insert the pinch bolt but do not tighten at this stage.

4. Fit the two screws securing the column lower bracket to the pedal box, and the two bolts and washers securing the top of the column to the knee bolster/ column support bracket.
   Tighten the column fixings in the following order:
   - column to pedal box; 10 Nm (7.5 lbf.ft);
   - column to knee bolster support; 15 Nm (11 lbf.ft);
   - upper u/j to intermediate shaft; 40 Nm (30 lbf.ft);

5. Fit the steering lock to the top bearing housing using new shear bolts, and tighten until the bolt heads shear.

6. Continue assembly in the reverse order to disassembly.

Intermediate Shaft

A short intermediate shaft and two universal joints (u/js) are used to transmit the steering torque from the upper column assembly to the steering rack pinion shaft. The orientation of the two u/js in relation to each other is important, and affects the steering 'feel' and smoothness of steering effort.

The upper u/j is integral with the upper column, and the intermediate shaft will fit into the u/j in only one position due to a master spline, and a 'flat' machined to accomodate the pinch bolt. The lower u/j will fit onto the rack pinion shaft in only one position, as dictated by the pinch bolt groove. Fitment of the intermediate shaft into the lower u/j provides the only method of setting joint orientation.

If removing the upper column assembly, remove the pinch bolt from the upper u/j. Joint orientation will then be retained. If the lower u/j is to be removed (e.g. rack assembly removal):

1. Disconnect the upper column from the intermediate shaft (see above).

2. Release the fixings securing the lower u/j shroud to the bulkhead, and withdraw the shroud over the intermediate shaft.

3. Release the pinch bolt securing the lower u/j to the pinion shaft, and rotate the shaft until the bolt may be removed and the u/j withdrawn.

4. Re-assembly: If the intermediate shaft has been separated from the lower u/j, the orientation must be set on assembly:
Taking the axis of the pinch bolt which secures the lower u/j to the intermediate shaft as a datum, first set the shaft so that the flat on the splines at the **top** end of the shaft is at 90° to the pinch bolt. Then turn the shaft an additional 2 splines **counterclockwise** before inserting into the u/j. See diagram. Fit the pinch bolt and tighten to 25 Nm (18 lbf.ft).

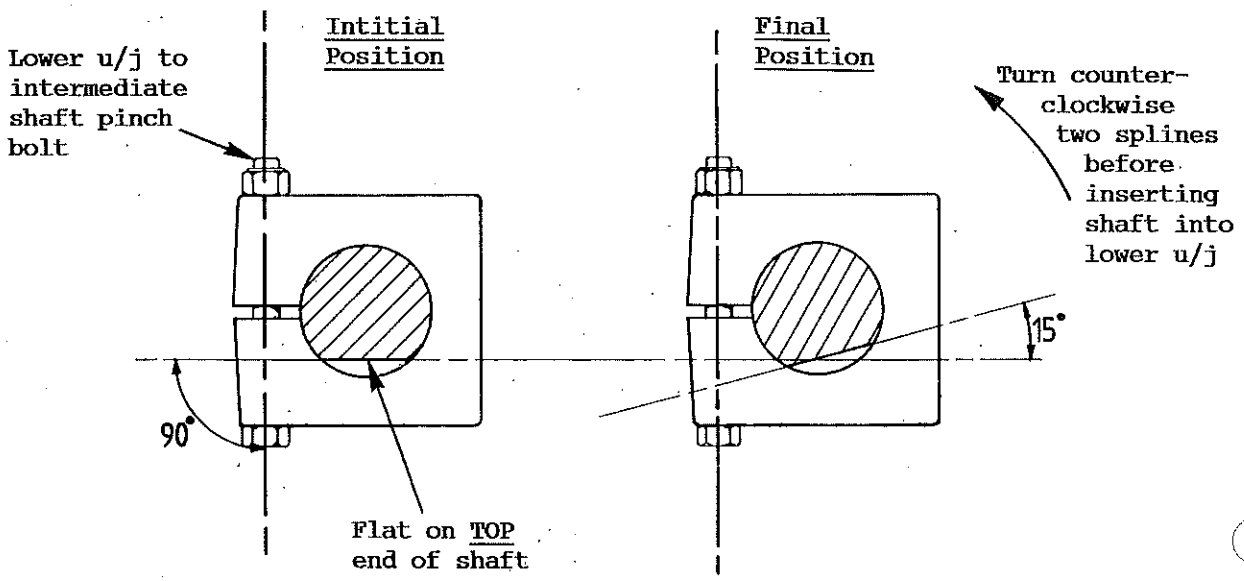

Assembled condition

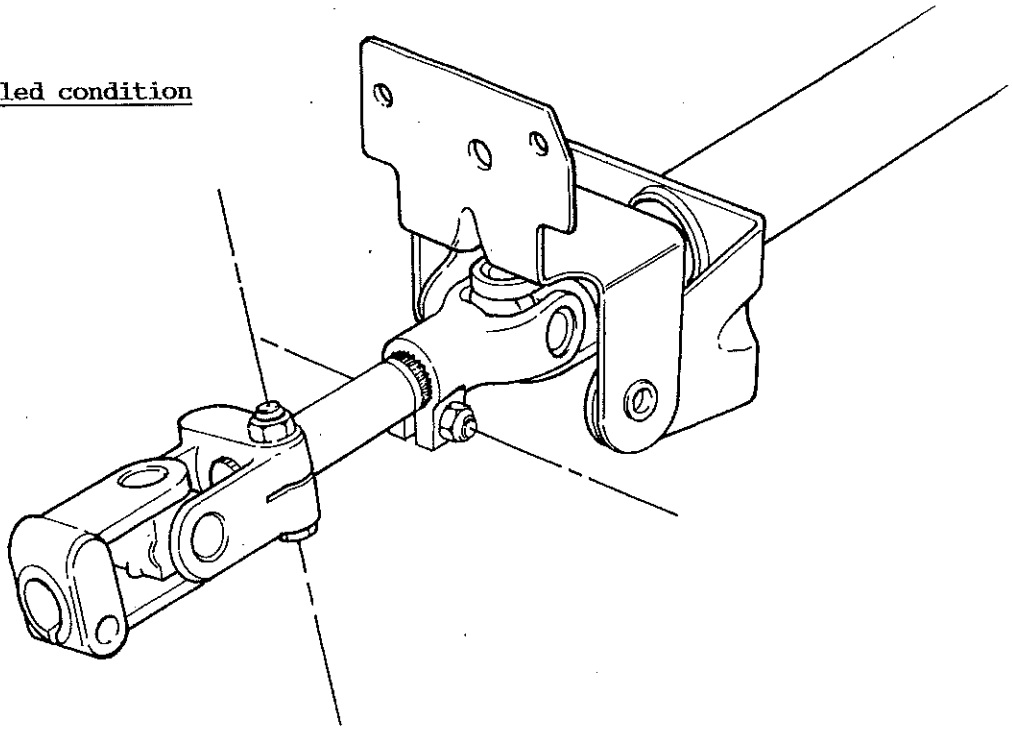

Note that this alignment is applicable to SIR cars only. For non-SIR cars, see Service Notes section HC.

5. Fit the lower u/j onto the rack assembly pinion shaft with the pinch bolt axis aligned with the groove in the shaft. Fit the pinch bolt and torque tighten to 25 Nm (18 lbf.ft).

6. Fit the lower u/j shroud over the intermediate shaft and secure to the bulkhead.

7. Refit the upper column assembly (see above).