CAUTION: To avoid deployment when troubleshooting the SIR system, use Digital Volt Ohm Meter (DVOM) T000T1034. DO NOT USE any type of electrical equipment other than those specified in this manual. Never use a non-powered probe type tester. Instructions in this manual must be followed carefully, otherwise personal injury may result.

CODE 24

(PAGE 1 0F 2)

STEERING COLUMN VOLTAGE TOO LOW

WAS THE "SIR DIAGNOSTIC SYSTEM CHECK" PERFORMED?

NO

- RETURN TO THE "SIR DIAGNOSTIC SYSTEM CHECK."

YES

- IGNITION "OFF".
- DISCONNECT 6-WAY SIR HARNESS CONNECTOR (SIR HC (A)).
- DISCONNECT ORANGE 3-WAY STEERING WHEEL CONNECTOR.
- CONNECT SIR LOAD T000T1035 TO THE SIR HARNESS SIDE (CAR SIDE) OF THE ORANGE 3-WAY STEERING WHEEL CONNECTOR.
- RECONNECT 6-WAY SIR HARNESS CONNECTOR (SIR HC (A)).

- IF CODE 31 IS CURRENT THEN GO TO CODE 31 CHART.
- IF CODE 32 IS CURRENT THEN GO TO CODE 32 CHART.
- IF CODE 42 IS CURRENT THEN GO TO CODE 42 CHART.

(1)

- TURN IGNITION SWITCH "ON".
- WAIT 20 SECONDS.

IS CODE 24 CURRENT?

NO

- REPLACE SIR COIL REFER TO SECTION WB.3-K.
- RECONNECT ALL SIR SYSTEM COMPONENTS, CLEAR SIR CODES.
- REPEAT "SIR DIAGNOSTIC SYSTEM CHECK".

YES

- IGNITION SWITCH "OFF".
- DISCONNECT DERM.
- DISCONNECT FORWARD DISCR. AND PASSENGER COMP. SENSOR.
- CHECK RESISTANCE VALUES OF SENSORS:
  - FORWARD DISCR. SENSOR BETWEEN TERM. "A" AND "B"
  - PASSENGER COMP. SENSOR BETWEEN TERM. "E" AND "F"
- ARE BOTH RESISTANCE VALUES BETWEEN 8.37 AND 8.54 KΩ?

NO

- REPLACE SENSOR WHICH WAS OUT OF REQUIREMENT.
- RECONNECT ALL SIR SYSTEM COMPONENTS, CLEAR SIR CODES.
- REPEAT "SIR DIAGNOSTIC SYSTEM CHECK".

YES

- DISCONNECT SIR LOAD TESTER
- IGNITION "ON"
- CHECK VOLTAGE TO GROUND AT ORANGE STEERING WHEEL CONNECTOR CKT 22W.

VOLTAGE

(2)

- DISCONNECT ARMING SENSOR AND RESISTOR MODULE
- CHECK VOLTAGE TO GROUND AT ORANGE STEERING WHEEL CONNECTOR CKT 22W.

NO VOLTAGE

- CHECK CKT 22W FOR OPEN BETWEEN ARMING SENSOR AND ORANGE CONNECTOR.

CKT OK

- REPLACE ARMING SENSOR
- REFER TO SECTION WB.3-F
- RECONNECT ALL SIR SYSTEM COMPONENTS, CLEAR SIR CODES.
- REPEAT "SIR DIAGNOSTIC SYSTEM CHECK".

CKT NOT OK

- REPAIR WIRING
- REFER TO SECTION WB.1-J
- RECONNECT ALL SIR SYSTEM COMPONENTS, CLEAR SIR CODES.
- REPEAT "SIR DIAGNOSTIC SYSTEM CHECK".

NO VOLTAGE

SEE CODE 24 (PAGE 2 OF 2)

VOLTAGE

- REPAIR SHORT TO VOLTAGE ON CKT 22W.
- REFER TO INSTRUCTIONS IN SECTION WB.1-J.
- RECONNECT ALL SIR SYSTEM COMPONENTS, CLEAR SIR CODES.
- REPEAT "SIR DIAGNOSTIC SYSTEM CHECK."

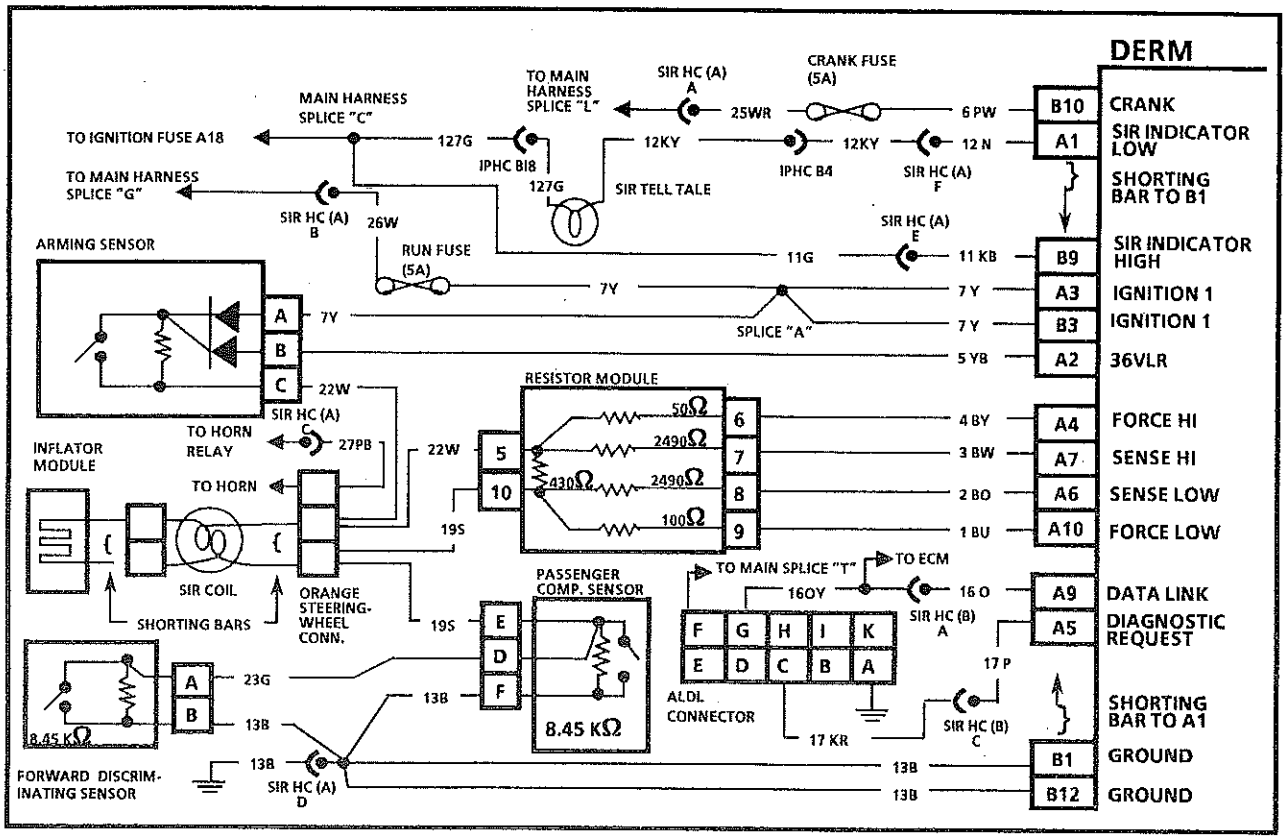

CODE 24 (PAGE 2 OF 2)

STEERING COLUMN VOLTAGE TOO LOW

Test Conditions:

Tested every 100 milliseconds during "Continuous Monitoring".

Failure Conditions:

Code 24 will set if the voltage at the "Sense Low" input terminal "A6" is between 0% and 41% of 36 VLR output voltage for 500 milliseconds.

Conditions To Clear:

Code 24 will clear if the voltage at the "Sense Low" input terminal "A6" is between 41% and 61% of 36VLR output voltage for 500 milliseconds.

Description:

"Continuous Monitoring" tests performed by the DERM. The "Continuous Monitoring" tests are performed by the DERM after the initial "Turn-ON" tests are completed and are performed every 100 milliseconds while Ignition 1 voltage is present at the DERM. The "Continuous Monitoring" tests check the continuity of the deployment loop from the 36VLR output of the DERM through the Arming Sensor, Inflator Module and the Discriminating Sensors to ground. Code 24 will set if the Arming Sensor resistance is too high or open, the Discriminating Sensor resistance is too low or shorted, the "Force Hi", "Sense Hi", "Sense Low" or "Force Low" circuits are shorted to ground or system voltage, the high side of the deployment loop is shorted to the low side.

Notes on Fault Tree:

1) Determines if fault is short to voltage on CKT 19S.
2) Determines if fault is short to voltage on CKT 4BY.
3) Determines if fault is short to voltage on CKT 1BU.

CAUTION: To avoid deployment when troubleshooting the SIR system, use Digital Volt Ohm Meter (DVOM) T000T1034. DO NOT USE any type of electrical equipment other than those specified in this manual. Never use a non-powered probe type tester. Instructions in this manual must be followed carefully, otherwise personal injury may result.

CODE 24

(Page 2 of 2)

STEERING COLUMN VOLTAGE TOO LOW

WERE YOU SENT HERE FROM CODE 24 (PAGE 1 OF 2)?

- NO
  - RETURN TO CODE 24 (PAGE 1 OF 2)
- YES

(1)
- MEASURE VOLTAGE TO GROUND FROM PASSENGER COMP. SENSOR HARNESS CONNECTOR TERMINAL "E."

- NO VOLTAGE
- VOLTAGE
  - REPAIR SHORT TO VOLTAGE ON CKT 19S.
  - REFER TO INSTRUCTIONS IN SECTION WB.1-J.

(2)
- MEASURE VOLTAGE TO GROUND FROM DERM CONNECTOR TERMINAL "A4.".

- NO VOLTAGE
- VOLTAGE
  - REPAIR SHORT TO VOLTAGE ON CKT 4BY.
  - REFER TO INSTRUCTIONS IN SECTION WB.1-J.

(3)
- MEASURE VOLTAGE TO GROUND FROM DERM CONNECTOR TERMINAL "A10."

- NO VOLTAGE
- VOLTAGE
  - REPAIR SHORT TO VOLTAGE ON CKT 1BU.
  - REFER TO INSTRUCTIONS IN SECTION WB.1-J.

- RECONNECT ALL SIR SYSTEM COMPONENTS, CLEAR SIR CODES.
- REPEAT "SIR DIAGNOSTIC SYSTEM CHECK."

IS CODE 24 PLUS CODE 26 SET?

- YES
  - CHECK CKT 2BO FOR OPEN, SHORTED TO GROUND OR 12V:
    - CHECK FOR CONTINUITY BETWEEN TERMINAL "A6" OF DERM HARNESS CONNECTOR AND TERMINAL "8" OF RESISTOR MODULE HARNESS CONNECTOR. REQUIREMENT: CONTINUITY
    - CHECK FOR CONTINUITY BETWEEN TERMINAL "A6" OF DERM HARNESS CONNECTOR AND GROUND. REQUIREMENT: NO CONTINUITY
    - MEASURE VOLTAGE AT TERMINAL "A6" OF DERM HARNESS CONNECTOR REQUIREMENT: 0 VOLTS
  - IS CKT OK?
  - YES
    - REPLACE RESISTOR MODULE
    - REFER TO SECTION WB.3-D.
    - RECONNECT ALL SIR SYSTEM COMPONENTS. CLEAR CODES.
    - REPEAT "SIR DIAGNOSTIC CHECK".
  - NO
    - REPAIR WIRING
    - REFER TO SECTION WB.1-J.
    - RECONNECT ALL SIR SYSTEM COMPONENTS, CLEAR CODES.
    - REPEAT "SIR DIAGNOSTIC CHECK".
- NO
  - CHECK FOR CONTINUITY TO GROUND AT THE FOLLOWING RESISTOR MODULE HARNESS CONNECTOR TERMINALS
    - "6" (CKT 4BY)
    - "7" (CKT 3BW)
    - "9" (CKT 1BU)
    - "10" (CKT 19S)
    - "5" (CKT 22W)

    AND CHECK FOR CONTINUITY TO GROUND AT THE PASSENGER COMPARTMENT SENSOR HARNESS CONNECTOR TERMINAL "D" (CKT 23G).
  - NO CONTINUITY
    - REPLACE DERM
    - REFER TO SECTION WB.3-E.
    - RECONNECT ALL SIR COMPONENTS.
    - REPEAT "SIR DIAGNOSTIC CHECK".
  - CONTINUITY
    - REPAIR SHORT TO GROUND IN CKT THAT HAD CONTINUITY.
    - REFER TO SECTION WB.1-J.
    - RECONNECT ALL SIR COMPONENTS, CLEAR CODES.
    - REPEAT "SIR DIAGNOSTIC CHECK".

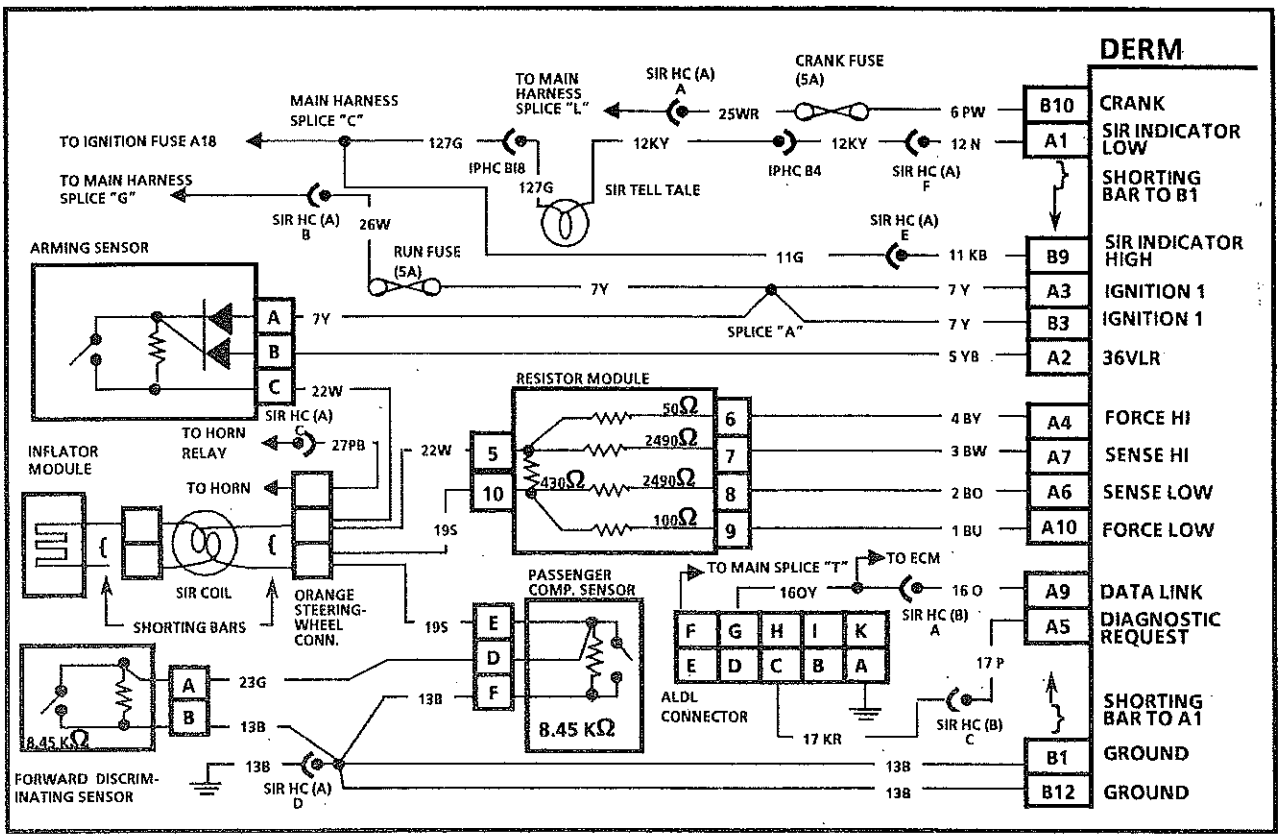

CODE 25

SHORT TO BATTERY IN STEERING COLUMN

Test Conditions:

Tested once each ignition cycle during the "Steering Column Resistance Test" if: 1) No faults are detected during "Turn-ON"; 2) No faults are detected during "Continuous Monitoring" for 1 second: 3) No Crank signal present.

Failure Conditions:

Code 25 will set if the voltage at the "Sense Low" Input terminal "A6" is equal to Ignition 1 voltage (± 2 volts) during the first portion of the Steering Column Resistance Test.

Conditions To Clear:

Current Code 25 will be cleared each time the Ignition Switch is turned "OFF."

Description:

The DERM grounds the "Force Low" input terminal "A10" and then monitors the voltage at the "Sense Low" input terminal "A6." If the voltage is greater than 3 volts Code 25 will set. Code 25 is an indication of a short to system voltage in the steering column, Arming or Passenger Comp. Sensor, or associated wiring. Additionally, this code can be set if the actual resistance of the 100 ohm resistor within the Resistor Module is too high or is open.

Notes on Fault Tree:

1) Determines if fault is short to voltage on CKT 22W or other components.
2) Determines if fault is short to voltage on CKT 19S.
3) Determines if fault is defective circuit from Resistor Module to DERM.
4) Determines if Resistor Module is defective.

CAUTION: To avoid deployment when troubleshooting the SIR system, use Digital Volt Ohm Meter (DVOM) T000T1034. DO NOT USE any type of electrical equipment other than those specified in this manual. Never use a non-powered probe type tester. Instructions in this manual must be followed carefully, otherwise personal injury may result.

CODE 25

SHORT TO BATTERY IN STEERING COLUMN

WAS THE "SIR DIAGNOSTIC SYSTEM CHECK" PERFORMED?

NO

- RETURN TO THE "SIR DIAGNOSTIC SYSTEM CHECK."

YES

- IGNITION "OFF".
- DISCONNECT 6-WAY SIR HARNESS CONNECTOR (SIR HC (A)).
- DISCONNECT ORANGE 3-WAY STEERING WHEEL CONNECTOR.
- CONNECT SIR LOAD T000T1035 TO THE SIR HARNESS SIDE (CAR SIDE) OF THE ORANGE 3-WAY STEERING WHEEL CONNECTOR.
- RECONNECT 6-WAY SIR HARNESS CONNECTOR (SIR HC (A)).

(1)

- IGNITION SWITCH "OFF."
- DISCONNECT DERM, ARMING SENSOR AND RESISTOR MODULE.
- IGNITION SWITCH "ON."
- MEASURE VOLTAGE TO GROUND FROM ARMING SENSOR HARNESS CONNECTOR TERMINAL "C."

VOLTAGE

- REPAIR SHORT TO VOLTAGE ON CKT 22W.
- REFER TO INSTRUCTIONS IN SECTION WB.1-J.
- RECONNECT ALL SIR SYSTEM COMPONENTS. CLEAR SIR CODES.
- REPEAT "SIR DIAGNOSTIC SYSTEM CHECK."

NO VOLTAGE

(2)

- MEASURE VOLTAGE TO GROUND FROM SIR HARNESS SIDE (CAR SIDE) OF ORANGE 3-WAY STEERING WHEEL CONNECTOR TERMINAL CKT 19S.

VOLTAGE

- REPAIR SHORT TO VOLTAGE ON CKT 19S.
- REFER TO INSTRUCTIONS IN SECTION WB.1-J.
- RECONNECT ALL SIR SYSTEM COMPONENTS. CLEAR SIR CODES.
- REPEAT "SIR DIAGNOSTIC SYSTEM CHECK."

NO VOLTAGE

(3)

- MEASURE VOLTAGE TO GROUND FROM DERM HARNESS CONNECTOR TERMINALS
  - "A4" (CKT 4BY)
  - "A7" (CKT 3BW)
  - "A6" (CKT 2BO)
  - "A10" (CKT 1BU)

VOLTAGE

- REPAIR SHORT TO VOLTAGE IN CKT THAT INDICATED VOLTAGE.
- REFER TO INSTRUCTIONS IN SECTION WB.1-J.
- RECONNECT ALL SIR SYSTEM COMPONENTS. CLEAR SIR CODES.
- REPEAT "SIR DIAGNOSTIC SYSTEM CHECK."

NO VOLTAGE

(4)

- CHECK RESISTANCE FROM TERMINAL "10" TO TERMINAL "9" OF RESISTOR MODULE.
- SHOULD BE 100 OHMS. IS IT?

NO

- REPLACE RESISTOR MODULE.
- RECONNECT ALL SIR SYSTEM COMPONENTS. CLEAR SIR CODES.
- REPEAT "SIR DIAGNOSTIC SYSTEM CHECK."

YES

- REPLACE DERM.
- RECONNECT ALL SIR SYSTEM COMPONENTS.
- REPEAT "SIR DIAGNOSTIC SYSTEM CHECK."

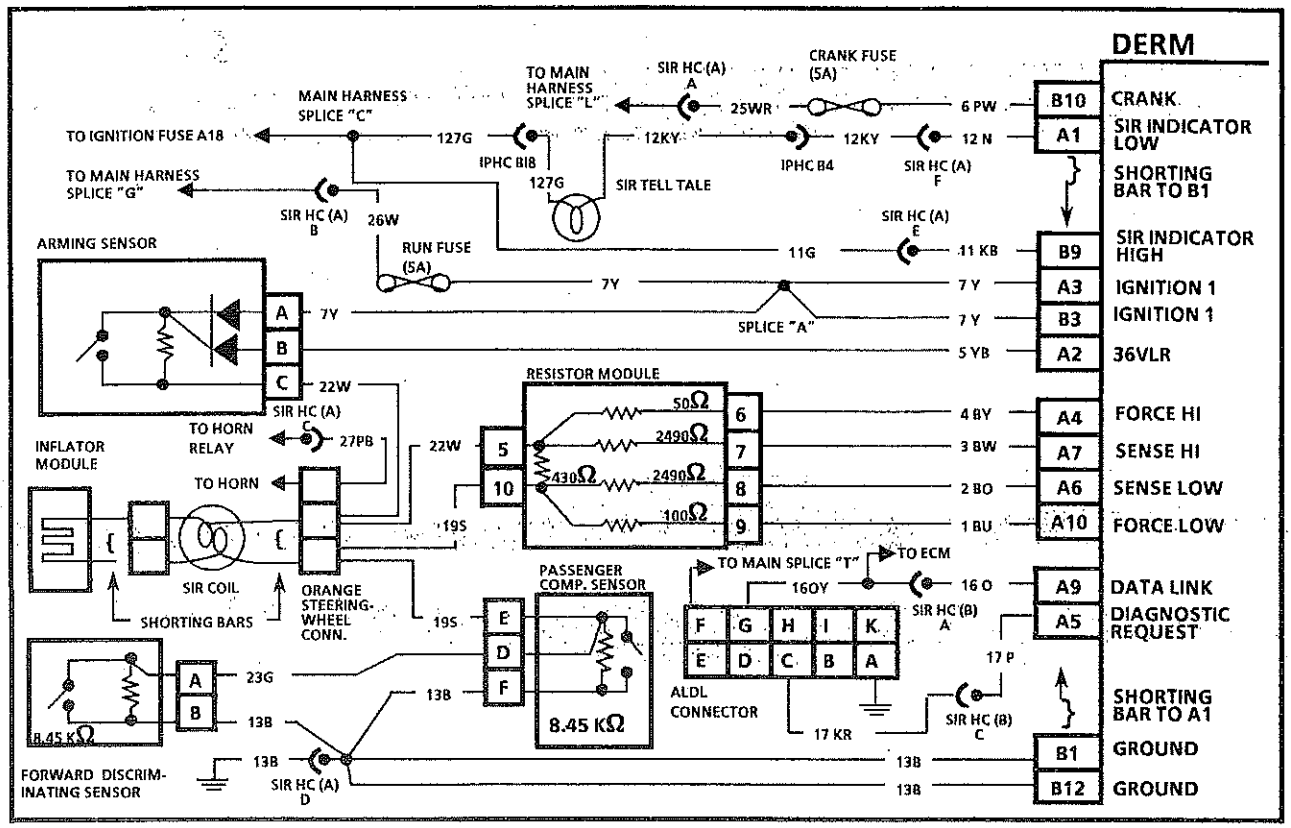

CODE 26

OPEN IN STEERING COLUMN

Test Conditions:

Tested every 100 milliseconds during "Continuous Monitoring".

Failure Conditions:

Code 26 will set if the voltage at the "Sense Hi" input terminal "A7" minus the voltage at the "Sense Low" input terminal "A6" is greater than 0.45 volts for 500 milliseconds.

Conditions To Clear:

Current Code 26 will clear if the voltage at the "Sense Hi" input terminal "A7" minus the voltage at the "Sense Low" input terminal "A6" is greater than 0 volts but less than 0.40 volts for 500 milliseconds after Code 26 has been set.

Description:

If there is an open in the SIR Coil, Inflator Module or wiring in the steering column the resistance between the "Sense Hi" input terminal "A7" and the "Sense Low" input terminal "A6" increases. This increased resistance causes a larger voltage drop from the "Sense Hi" input to the "Sense Low" input, across the 430 ohm resistor in the Resistor Module. The increase in voltage between the "Sense Hi" input and the "Sense Low" input is sensed by the DERM during the "Continuous Monitoring" Tests and Code 26 is set.

Notes on Fault Tree:

1) Checks if fault is in the steering column. The SIR load tester T000T1035 simulates the resistance of good steering column wiring and components.
2) Checks if fault is in the Inflator Module or the SIR Coil.

CAUTION: To avoid deployment when troubleshooting the SIR system, use Digital Volt Ohm Meter (DVOM) T000T1034. DO NOT USE any type of electrical equipment other than those specified in this manual. Never use a non-powered probe type tester. Instructions in this manual must be followed carefully, otherwise personal injury may result.

CODE 26

OPEN IN STEERING COLUMN

WAS THE "SIR DIAGNOSTIC SYSTEM CHECK" PERFORMED?

NO

- RETURN TO THE "SIR DIAGNOSTIC SYSTEM CHECK."

YES

- IGNITION "OFF".
- DISCONNECT 6-WAY SIR HARNESS CONNECTOR (SIR HC (A)).
- DISCONNECT ORANGE 3-WAY STEERING WHEEL CONNECTOR.
- CONNECT SIR LOAD T000T1035 TO THE SIR HARNESS SIDE (CAR SIDE) OF THE ORANGE 3-WAY STEERING WHEEL CONNECTOR.
- RECONNECT 6-WAY SIR HARNESS CONNECTOR (SIR HC (A)).

(1)

- TURN IGNITION SWITCH "ON."
- WAIT 20 SECONDS.
- IS CODE 26 CURRENT?

YES

- IGNITION SWITCH "OFF."
- DISCONNECT DERM AND RESISTOR MODULE.
- CHECK CKT 2BO FOR OPEN, SHORTED TO GROUND OR VOLTAGE :
  - CHECK FOR CONTINUITY BETWEEN TERMINAL "A6" OF DERM HARNESS CONNECTOR AND TERMINAL "8" OF RESISTOR MODULE HARNESS CONNECTOR. REQUIREMENT: CONTINUITY
  - CHECK FOR CONTINUITY BETWEEN TERMINAL "A6" OF DERM HARNESS CONNECTOR AND GROUND. REQUIREMENT: NO CONTINUITY
  - MEASURE VOLTAGE AT TERMINAL "A6" OF DERM HARNESS CONNECTOR REQUIREMENT: 0 VOLTS
- IS CKT OK?

YES

- CHECK FOR CONTINUITY BETWEEN TERMINALS "A2" AND A7" OF DERM HARNESS CONNECTOR.

NO CONTINUITY

- REPLACE DERM
- REFER TO SECTION WB.3-E.
- RECONNECT ALL SIR SYSTEM COMPONENTS, CLEAR SIR CODES.
- REPEAT "SIR DIAGNOSTIC SYSTEM CHECK."

CONTINUITY

- REPAIR SHORT FROM 36 VLR CKT 5YB TO CKT 3BW.
- REFER TO SECTION WB.1-J.
- RECONNECT ALL SIR SYSTEM COMPONENTS, CLEAR SIR CODES.
- REPEAT "SIR DIAGNOSTIC SYSTEM CHECK."

NO

- REPAIR CKT 2BO.
- REFER TO INSTRUCTIONS IN SECTION WB.1-J.
- RECONNECT ALL SIR SYSTEM COMPONENTS, CLEAR CODES
- REPEAT "SIR DIAGNOSTIC SYSTEM CHECK".

(2)

- IGNITION SWITCH "OFF."
- DISCONNECT SIR LOAD T000T1035 AT THE CAR SIDE OF THE ORANGE 3-WAY STEERING WHEEL CONNECTOR.
- DISCONNECT ORANGE 2-WAY CONNECTOR AT INFLATOR MODULE.
- CONNECT SIR LOAD T000T1035 TO THE CAR SIDE OF THE ORANGE 2-WAY CONNECTOR.
- CONNECT ORANGE 3-WAY STEERING WHEEL CONNECTOR.
- TURN IGNITION SWITCH "ON."
- WAIT 20 SECONDS.
- IS CODE 26 CURRENT?

YES

- REPLACE SIR COIL, REFER TO SECTION WB.3-K.
- RECONNECT ALL SIR SYSTEM COMPONENTS, CLEAR SIR CODES.
- REPEAT "SIR DIAGNOSTIC SYSTEM CHECK."

NO

- REPLACE INFLATOR MODULE, REFER TO SECTION WB.3-I.
- RECONNECT ALL SIR SYSTEM COMPONENTS, CLEAR SIR CODES.
- REPEAT "SIR DIAGNOSTIC SYSTEM CHECK."

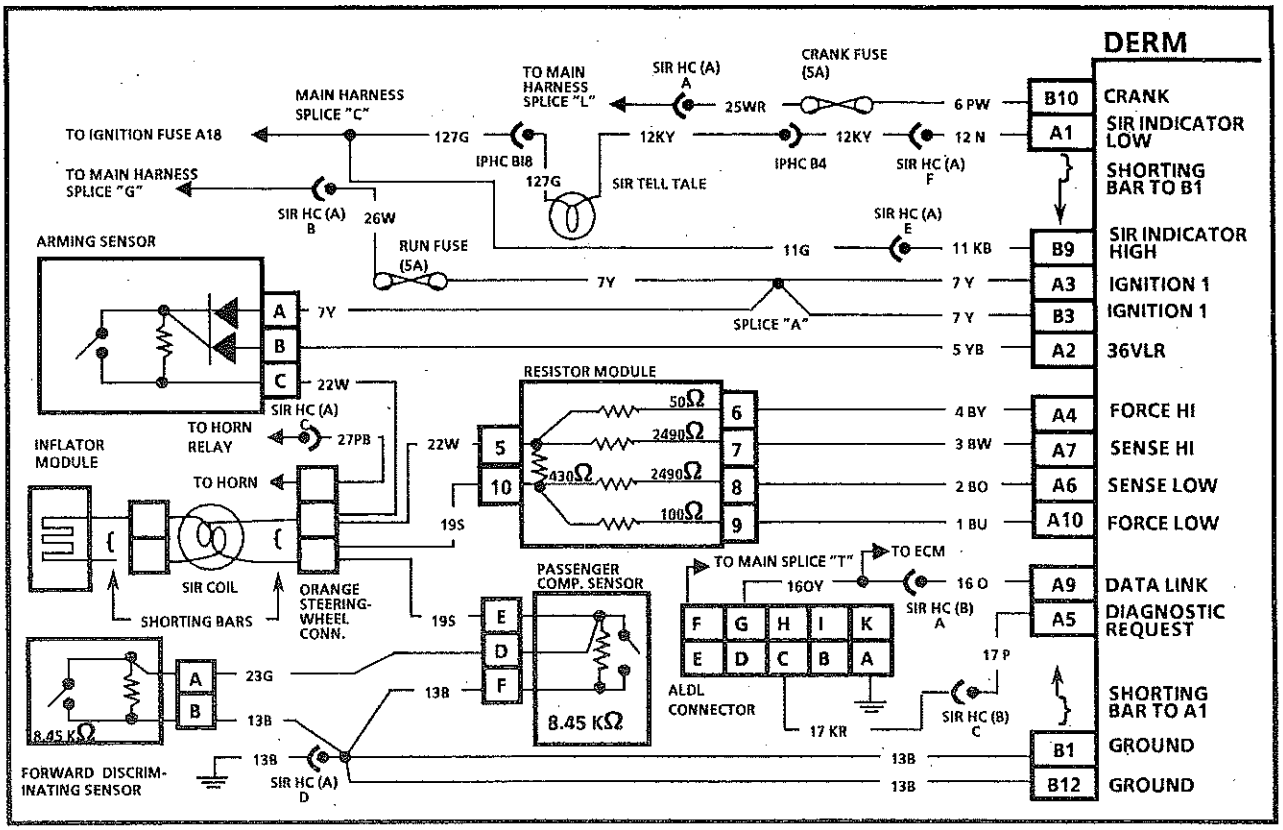

CODE 31

OPEN 36VLR TO DEPLOYMENT LOOP

Test Conditions:

Tested every 100 milliseconds during "Continuous Monitoring".

Failure Conditions:

Code 31 will set if: 1) The Voltage at the "Sense Low" input (terminal A6) is between 28% and 59% of Ignition 1 output voltage for 700 milliseconds; 2) Code 42 is not set.

Conditions To Clear:

Current Code 31 will clear if the voltage at the "Sense Low" input (terminal A6) is between 41% and 61% of 36VLR output voltage for 500 milliseconds.

Description:

The voltage at the "Sense Low" input terminal "A6" is between 41% and 61% of 36VLR output voltage when 36VLR output of the DERM is functional. Should the circuit be open between the 36VLR output and the Arming Sensor, Ignition 1 voltage will be supplying the deployment loop. The voltage at the "Sense Low" input terminal "A6" will decrease due to the decrease in the supply voltage and Code 31 will set after 700 milliseconds (if Code 42 is not set). Code 31 indicates an open in the wiring between the 36VLR output of the DERM and the Arming Sensor, an open diode in the Arming Sensor or a problem with "Sense High" or "Sense Low" circuits.

Notes on Fault Tree:

1) Checks if the fault is in the 36VLR Circuit between the DERM and the Arming Sensor or if the fault is in the Arming Sensor.

CAUTION: To avoid deployment when troubleshooting the SIR system, use Digital Volt Ohm Meter (DVOM) T000T1034. DO NOT USE any type of electrical equipment other than those specified in this manual. Never use a non-powered probe type tester. Instructions in this manual must be followed carefully, otherwise personal injury may result.

CODE 31

OPEN 36VLR TO DEPLOYMENT LOOP

WAS THE "SIR DIAGNOSTIC SYSTEM CHECK" PERFORMED?

NO

- RETURN TO THE "SIR DIAGNOSTIC SYSTEM CHECK."

YES

- IGNITION "OFF".
- DISCONNECT 6-WAY SIR HARNESS CONNECTOR (SIR HC (A)).
- DISCONNECT ORANGE 3-WAY STEERING WHEEL CONNECTOR.
- CONNECT SIR LOAD T000T1035 TO THE SIR HARNESS SIDE (CAR SIDE) OF THE ORANGE 3-WAY STEERING WHEEL CONNECTOR.
- RECONNECT 6-WAY SIR HARNESS CONNECTOR (SIR HC (A)).

(1)

- IGNITION SWITCH "ON."
- BACKPROBE DERM MEASURING VOLTAGE FROM TERMINAL A2 TO GROUND.

NOT 30 - 40 VOLTS

- REPLACE DERM
- REFER TO SECTION WB.3-E.
- RECONNECT ALL SIR SYSTEM COMPONENTS, CLEAR SIR CODES.
- REPEAT "SIR DIAGNOSTIC SYSTEM CHECK".

30 - 40 VOLTS

- IGNITION "OFF"
- DISCONNECT DERM AND ARMING SENSOR
- CHECK FOR CONTINUITY BETWEEN TERMINAL "A2". OF DERM HARNESS CONNECTOR AND TERMINAL "B" OF ARMING SENSOR HARNESS CONNECTOR.

NO CONTINUITY

- REPAIR OPEN IN 36VLR CKT 5YB BETWEEN DERM AND ARMING SENSOR.
- REFER TO WIRE REPAIR INSTRUCTIONS IN SECTION WB.1-J.
- RECONNECT ALL SIR SYSTEM COMPONENTS, CLEAR SIR CODES.
- REPEAT "SIR DIAGNOSTIC SYSTEM CHECK".

CONTINUITY

- REPLACE ARMING SENSOR, REFER TO SECTION WB.3-F.
- RECONNECT ALL SIR SYSTEM COMPONENTS, CLEAR SIR CODES.
- REPEAT "SIR DIAGNOSTIC SYSTEM CHECK."

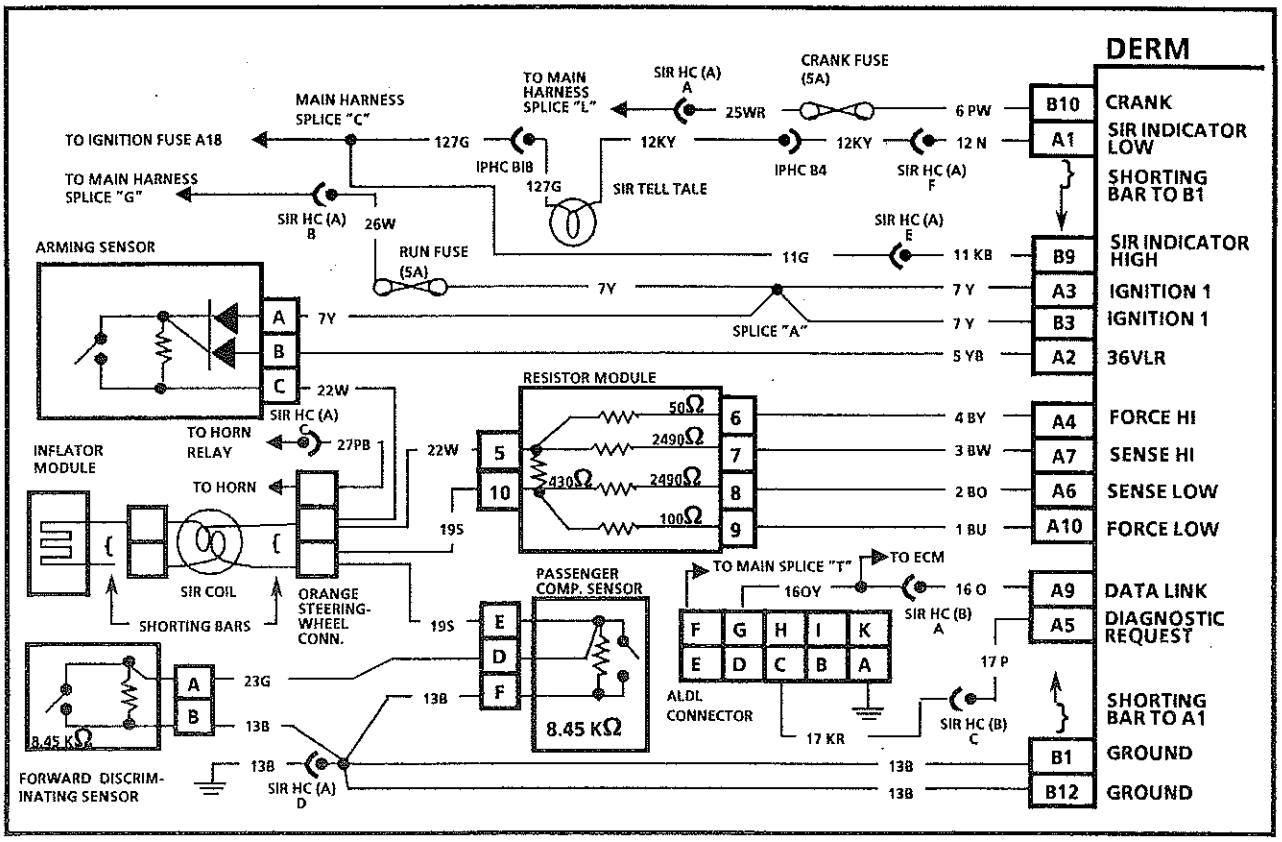

CODE 32

GROUNDED 36VLR CKT

Test Conditions:

Tested every 100 milliseconds during "Continuous Monitoring".

Failure Conditions:

Code 32 will set if: 1) The voltage at the "Sense Low" input terminal "A6" is between 28% and 59% of Ignition 1 output voltage for 700 milliseconds; 2) Code 42 is set.

Conditions To Clear:

Current Code 32 will clear if the voltage at the "Sense Low" input terminal "A6" is between 41% and 61% of 36VLR output voltage for 500 milliseconds.

Description:

The voltage at the "Sense Low" input terminal "A6" is between 41% and 61% of 36VLR output voltage when 36VLR output of the DERM is charged. Should the circuit short to ground between the 36VLR output and the Arming Sensor, Ignition 1 voltage will be supplying the deployment loop. The voltage at the "Sense Low" input terminal "A6" will decrease due to the decrease in the supply voltage and Code 32 will set after 700 milliseconds. Code 32 indicates a short to ground in the wiring between the 36VLR output of the DERM and the Arming Sensor.

Notes on Fault Tree:

1) Checks for a short to ground in the 36VLR circuit between the DERM and the Arming Sensor.

CAUTION: To avoid deployment when troubleshooting the SIR system, use Digital Volt Ohm Meter (DVOM) T000T1034. DO NOT USE any type of electrical equipment other than those specified in this manual. Never use a non-powered probe type tester. Instructions in this manual must be followed carefully, otherwise personal injury may result.

CODE 32
GROUNDED 36VLR CKT

WAS THE "SIR DIAGNOSTIC SYSTEM CHECK" PERFORMED?

YES

- IGNITION "OFF".
- DISCONNECT 6-WAY SIR HARNESS CONNECTOR (SIR HC (A)).
- DISCONNECT ORANGE 3-WAY STEERING WHEEL CONNECTOR.
- CONNECT SIR LOAD T000T1035 TO THE SIR HARNESS SIDE (CAR SIDE) OF THE ORANGE 3-WAY STEERING WHEEL CONNECTOR.
- RECONNECT 6-WAY SIR HARNESS CONNECTOR (SIR HC (A)).

(1)

- DISCONNECT DERM.
- DISCONNECT ARMING SENSOR.
- CHECK FOR CONTINUITY FROM TERMINAL "A2" OF DERM HARNESS CONNECTOR TO GROUND.

NO CONTINUITY

- RECONNECT ARMING SENSOR
- CHECK FOR CONTINUITY FROM TERMINAL "A2" OF DERM HARNESS CONNECTOR TO GROUND.

NO CONTINUITY

- REPLACE DERM, REFER TO SECTION WB.3-E.
- RECONNECT ALL SIR SYSTEM COMPONENTS.
- REPEAT "SIR DIAGNOSTIC SYSTEM CHECK."

CONTINUITY

- REPLACE ARMING SENSOR, REFER TO SECTION WB.3-F.
- RECONNECT ALL SIR SYSTEM COMPONENTS, CLEAR SIR CODES.
- REPEAT "SIR DIAGNOSTIC SYSTEM CHECK."

CONTINUITY

- REPAIR SHORT TO GROUND ON 36VLR CKT 5YB.
- REFER TO INSTRUCTIONS IN SECTION WB.1-J.
- RECONNECT ALL SIR SYSTEM COMPONENTS, CLEAR SIR CODES
- REPEAT "SIR DIAGNOSTIC SYSTEM CHECK."

NO

- RETURN TO THE "SIR DIAGNOSTIC SYSTEM CHECK."

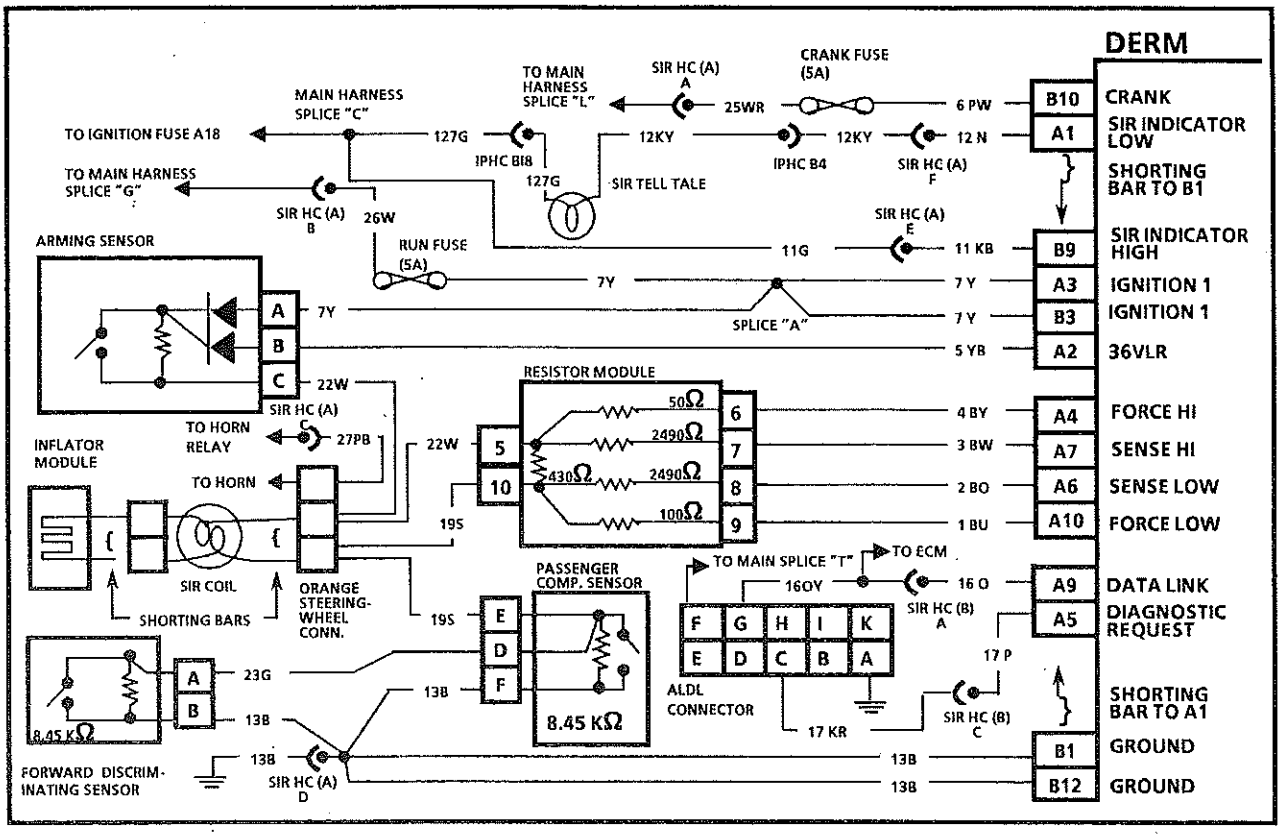

HISTORY CODE 33

STEERING DIODE SHORTED IN ARMING SENSOR

Test Conditions:

Tested once during each ignition cycle at "Turn-ON".

Failure Conditions:

History Code 33 will set if the voltage at the 36VLR output of the DERM terminal "A2" is equal to the Ignition 1 voltage (±2 volts) within the first 500 milliseconds after the ignition is turned on, three ignition cycles in a row.

Note: History Code 33 will not set if a history Code 51 is set.

Conditions To Clear:

History Code 33 will remain as a History Code until codes are cleared with a TECH 1.

Description:

At "Turn-ON" the DERM monitors the voltage at the 36VLR output terminal "A2" before this output begins to charge. If the diode in the Arming Sensor connected to Ignition 1 is shorted, Ignition 1 voltage will be present at the 36VLR output terminal "A2" as soon as the ignition is turned "ON". If the DERM detects this Ignition voltage (±2 volts) three ignition cycles in a row History Code 33 will be set.

Notes on Fault Tree:

1) Checks if diode on 36VLR circuit in the Arming Sensor is shorted.

CAUTION: To avoid deployment when troubleshooting the SIR system, use Digital Volt Ohm Meter (DVOM) T000T1034. DO NOT USE any type of electrical equipment other than those specified in this manual. Never use a non-powered probe type tester. Instructions in this manual must be followed carefully, otherwise personal injury may result.

HISTORY CODE 33

STEERING DIODE SHORTED IN ARMING SENSOR

WAS THE "SIR DIAGNOSTIC SYSTEM CHECK" PERFORMED?

NO

- RETURN TO THE "SIR DIAGNOSTIC SYSTEM CHECK."

YES

- IGNITION "OFF".
- DISCONNECT 6-WAY SIR HARNESS CONNECTOR (SIR HC (A)).
- DISCONNECT ORANGE 3-WAY STEERING WHEEL CONNECTOR.
- CONNECT SIR LOAD T000T1035 TO THE SIR HARNESS SIDE (CAR SIDE) OF THE ORANGE 3-WAY STEERING WHEEL CONNECTOR.
- RECONNECT 6-WAY SIR HARNESS CONNECTOR (SIR HC (A)).

(1)

- DISCONNECT DERM.
- IGNITION SWITCH "ON."
- MEASURE VOLTAGE FROM DERM HARNESS CONNECTOR TERMINAL "A2" TO GROUND.

NO VOLTAGE

- NOTE: THIS CODE CAN BE CAUSED BY SHORT IGNITION CYCLES, IN SUCH CASES THE SIR TELL TALE WILL NEVER BE ILLUMINATED. CONDITION MAY BE NORMAL.
- RECONNECT ALL SIR SYSTEM COMPONENTS, CLEAR SIR CODES.
- REPEAT "SIR DIAGNOSTIC SYSTEM CHECK."

VOLTAGE

- REPLACE ARMING SENSOR, REFER TO SECTION WB.3-F.
- RECONNECT ALL SIR SYSTEM COMPONENTS, CLEAR SIR CODES.
- REPEAT "SIR DIAGNOSTIC SYSTEM CHECK."

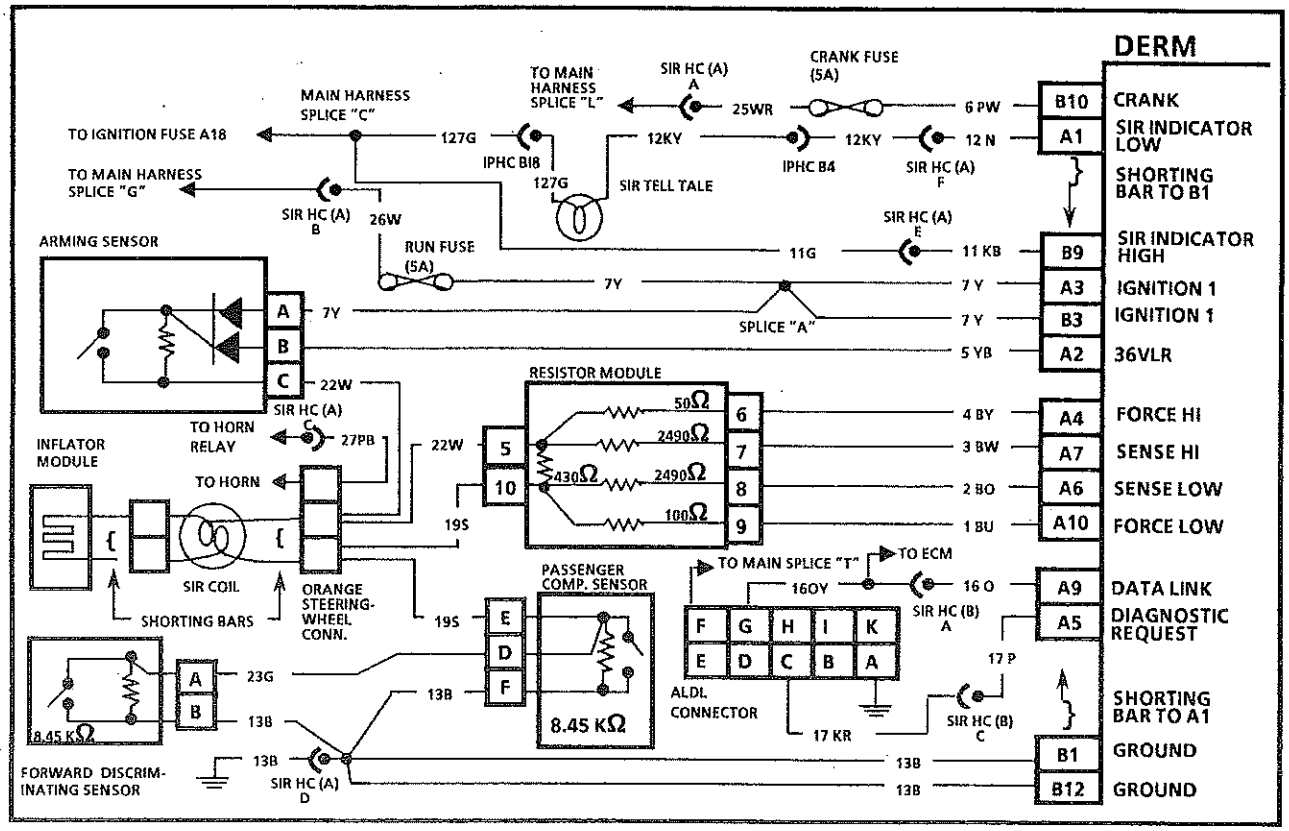

CODE 34 (PAGE 1 OF 3)

OPEN IN IGNITION 1 FEED TO DEPLOYMENT LOOP

Test Conditions:

Tested once during each ignition cycle at "Turn-ON".

Failure Conditions:

Code 34 will set if the voltage at the "Sense Low" input terminal "A6" is less than 28% of Ignition 1 output voltage for 500 milliseconds and 36VLR is less than Ignition 1 output voltage at "Turn-ON."

Note: History Code 34 will not set if a history Code 51 is set.

Conditions To Clear:

To clear Code 34, the ignition must be "OFF" long enough to assure the 36VLR supply voltage has fully discharged. Once 36VLR is discharged, the DERM will again check the failure conditions upon key "ON". If the failure conditions are not present (no failure indicated) then, and only then, will current Code 34 be cleared.

Description:

At "Turn-ON" the DERM monitors the voltage at the "Sense Low" input terminal "A6" for 500 milliseconds. The DERM expects the voltage to be between 28% and 59% of Ignition 1 voltage before the 36VLR output is charged. If Ignition 1 circuit from the Run Fuse to the Arming Sensor is open or the Ignition 1 diode in the Arming Sensor is open the voltage at the "Sense Low" input terminal "A6" will be less than 4.6 volts and Code 34 will set.

CAUTION: To avoid deployment when troubleshooting the SIR system, use Digital Volt Ohm Meter (DVOM) T000T1034. DO NOT USE any type of electrical equipment other than those specified in this manual. Never use a non-powered probe type tester. Instructions in this manual must be followed carefully, otherwise personal injury may result.

CODE 34

(PAGE 1 OF 3)

OPEN IN IGNITION 1 FEED TO DEPLOYMENT LOOP

WAS THE "SIR DIAGNOSTIC SYSTEM CHECK" PERFORMED?

- YES →
- NO → • RETURN TO THE "SIR DIAGNOSTIC SYSTEM CHECK."

- IGNITION "OFF".
- DISCONNECT 6-WAY SIR HARNESS CONNECTOR (SIR HC (A)).
- DISCONNECT ORANGE 3-WAY STEERING WHEEL CONNECTOR.
- CONNECT SIR LOAD T000T1035 TO THE SIR HARNESS SIDE (CAR SIDE) OF THE ORANGE 3-WAY STEERING WHEEL CONNECTOR.
- RECONNECT 6-WAY SIR HARNESS CONNECTOR (SIR HC (A)).

WAS CODE 23 OR 24 SET ALSO?

- YES →
- NO →
  - DISCONNECT ARMING SENSOR.
  - TURN IGNITION SWITCH "ON."
  - CHECK VOLTAGE FROM ARMING SENSOR HARNESS CONNECTOR TERMINAL A TO GROUND.
  - SYSTEM VOLTAGE → • REPLACE ARMING SENSOR, REFER TO SECTION WB.3-F.
  - NOT SYSTEM VOLTAGE → • REPAIR OPEN IN CKT 7Y FROM RUN FUSE TO ARMING SENSOR.
  - • RECONNECT ALL SIR SYSTEM COMPONENTS, CLEAR SIR CODES.
  - • REPEAT "SIR DIAGNOSTIC SYSTEM CHECK."

- IGNITION SWITCH "ON."
- WAIT 2 MINUTES.
  ARE CODES 34 PLUS CODE 23 OR 24 STILL CURRENT?

- YES →
- NO →
  - IGNITION SWITCH "OFF".
  - DISCONNECT SIR LOAD T000T1035 AT THE CAR SIDE OF THE ORANGE 3-WAY STEERING WHEEL CONNECTOR.
  - DISCONNECT ORANGE 2-WAY CONN. AT INFLATOR MODULE.
  - CONNECT SIR LOAD T000T1035 TO THE CAR SIDE OF THE ORANGE 2-WAY CONNECTOR.
  - CONNECT ORANGE 3-WAY STEERING WHEEL CONNECTOR.
  - TURN IGNITION SWITCH "ON."
  - WAIT 2 MINUTES.
    ARE BOTH CODES 24 AND 34 CURRENT?
  - YES →
    - REPLACE SIR COIL, REFER TO SECTION WB.3-K.
    - RECONNECT ALL SIR SYSTEM COMPONENTS.
    - CLEAR SIR CODES.
    - KEY OFF FOR 10 MINUTES.
    - REPEAT "SIR DIAGNOSTIC SYSTEM CHECK."
  - NO →
    - REPLACE INFLATOR MODULE, REFER TO SECTION WB.3-I.
    - RECONNECT ALL SIR SYSTEM COMPONENTS.
    - CLEAR SIR CODES.
    - KEY OFF FOR 10 MINUTES.
    - REPEAT "SIR DIAGNOSTIC SYSTEM CHECK."

IS CODE 23 OR 24 SET IN ADDITION TO CODE 34?

- CODE 24 →
  - IGNITION SWITCH "OFF."
  - DISCONNECT DERM, ARMING SENSOR, RESISTOR MODULE AND SIR LOAD TESTER T000T1035.
  - CHECK FOR CONTINUITY FROM RESISTOR MODULE HARNESS CONNECTOR TERMINAL 5 TO GROUND.
  - NO CONTINUITY →
    - CHECK FOR CONTINUITY FROM RESISTOR MODULE HARNESS CONNECTOR TERMINAL "6" TO GROUND.
    - NO CONTINUITY →
      - GO TO CODE 34 (PAGE 2 OF 3)
    - CONTINUITY →
      - REPAIR SHORT TO GROUND ON CKT 4BY.
  - CONTINUITY →
    - REPAIR SHORT TO GROUND ON CKT 22W.
  - RECONNECT ALL SIR SYSTEM COMPONENTS, CLEAR SIR CODES.
  - KEY OFF FOR 10 MINUTES.
  - REPEAT "SIR DIAGNOSTIC SYSTEM CHECK."
- CODE 23 →
  - GO TO CODE 34 (PAGE 3 OF 3, LOWER END)

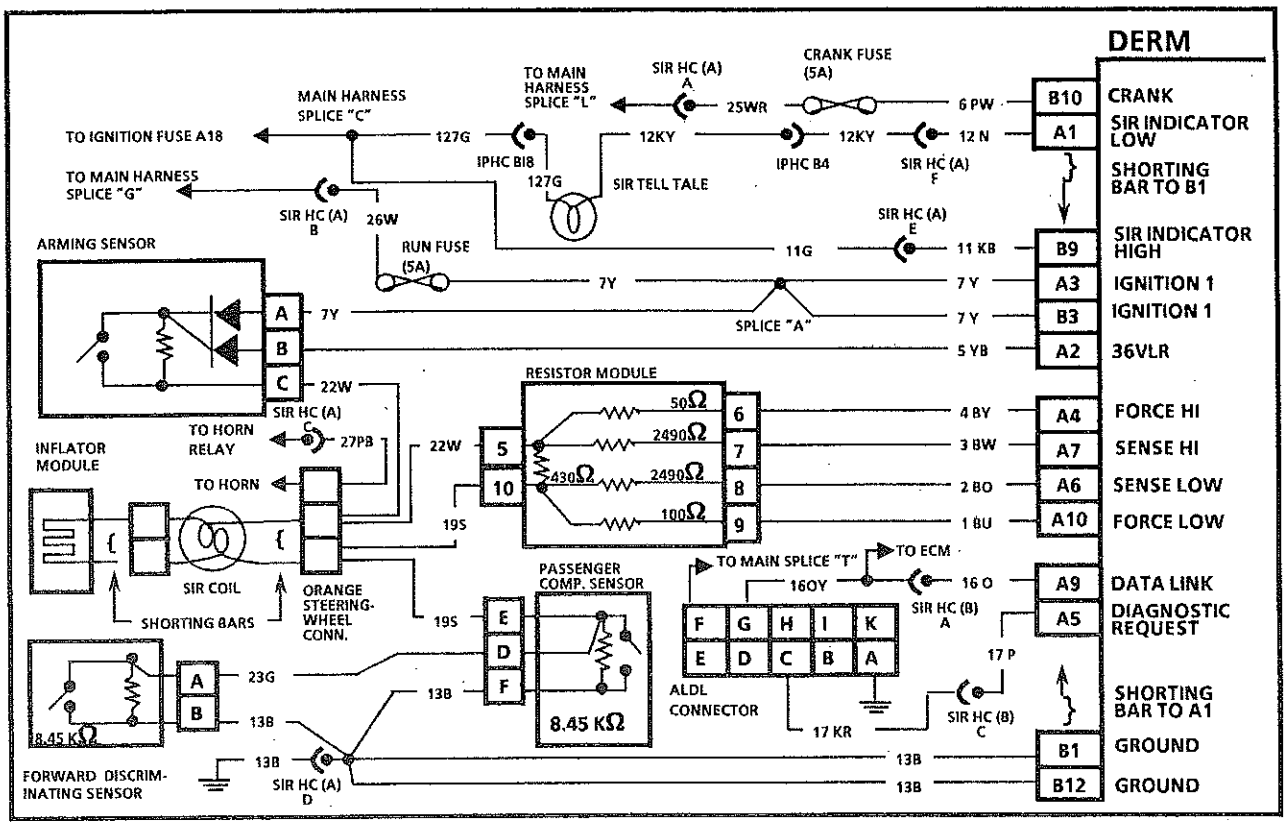

CODE 34 (PAGE 2 OF 3)

OPEN IN IGNITION 1 FEED TO DEPLOYMENT LOOP

Test Conditions:

Tested once during each ignition cycle at "Turn-ON."

Failure Conditions:

Code 34 will set if the voltage at the "Sense Low" input terminal "A6" is less than 28% of Ignition 1 output voltage for 500 milliseconds and 36VLR is less than Ignition 1 output voltage at "Turn-ON."

Conditions To Clear:

To clear Code 34, the ignition must be "OFF" long enough to assure the 36VLR supply voltage has fully discharged. Once 36VLR is discharged, the DERM will again check the failure conditions upon key "ON". If the failure conditions are not present (no failure indicated) then, and only then, will current Code 34 be cleared.

Description:

At "Turn-ON" the DERM monitors the voltage at the "Sense Low" input terminal "A6" for 500 milliseconds. The DERM expects the voltage to be between 28% and 59% of Ignition 1 voltage before the 36VLR output is charged. If Ignition 1 circuit from the Run Fuse to the Arming Sensor is open or the Ignition 1 diode in the Arming Sensor is open the voltage at the "Sense Low" input terminal "A6" will be less than 4.6 volts and Code 34 will set.

CAUTION: To avoid deployment when troubleshooting the SIR system, use Digital Volt Ohm Meter (DVOM) T000T1034. DO NOT USE any type of electrical equipment other than those specified in this manual. Never use a non-powered probe type tester. Instructions in this manual must be followed carefully, otherwise personal injury may result.

CODE 34

(PAGE 2 OF 3)

OPEN IN IGNITION 1 FEED TO DEPLOYMENT LOOP

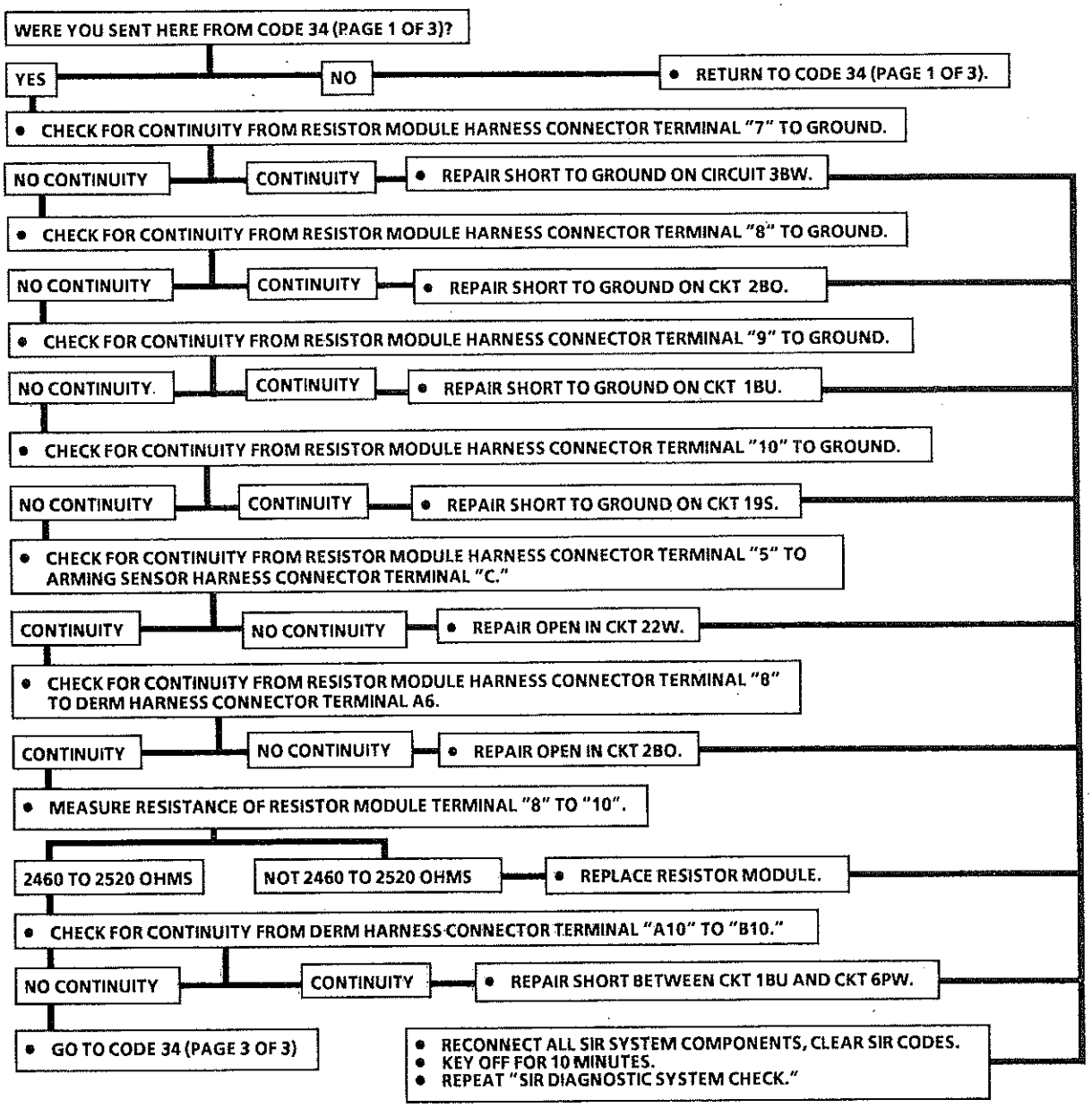

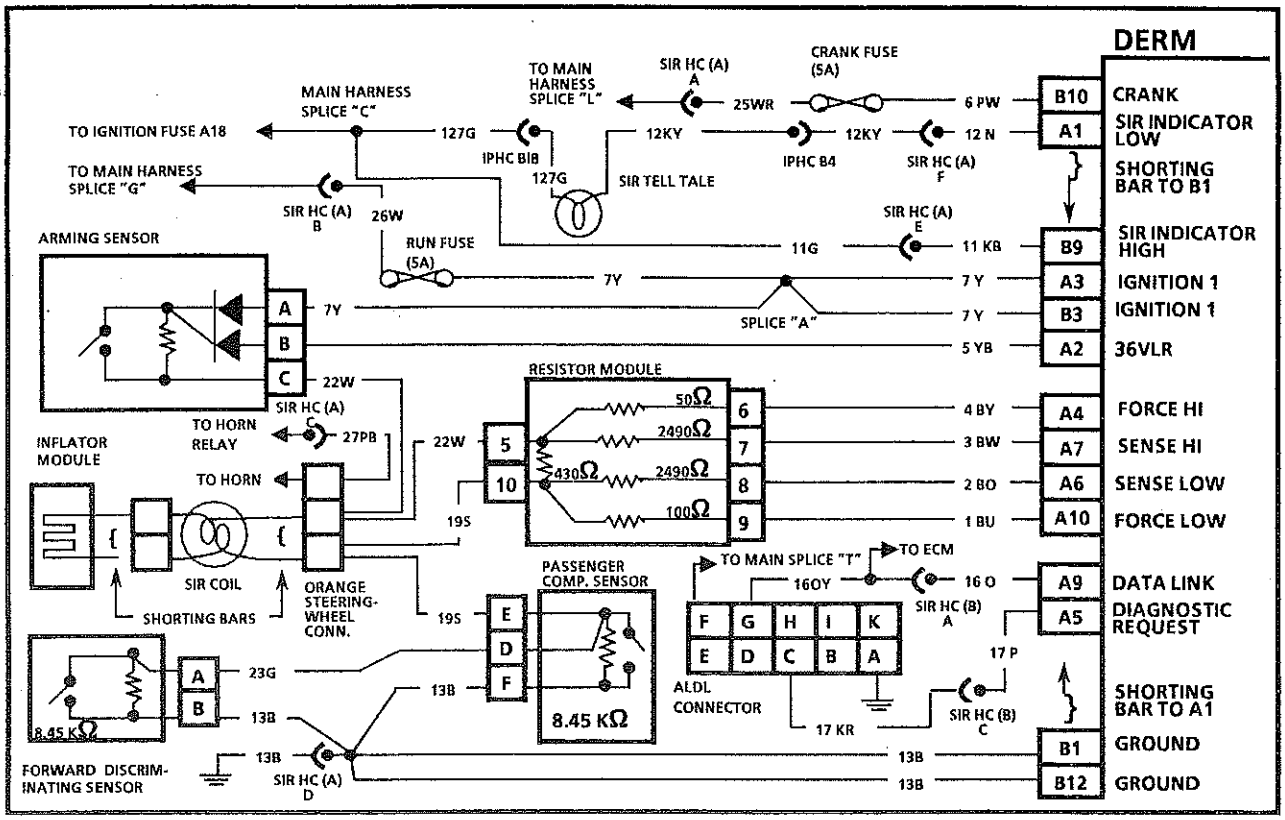

CODE 34 (PAGE 3 OF 3)

OPEN IN IGNITION 1 FEED TO DEPLOYMENT LOOP

Test Conditions:

Tested once during each ignition cycle at "Turn-ON."

Failure Conditions:

Code 34 will set if the voltage at the "Sense Low" input terminal "A6" is less than 28% of Ignition 1 output voltage for 500 milliseconds and 36VLR is less than Ignition 1 output voltage at "Turn-ON."

Conditions To Clear:

To clear Code 34, the ignition must be "OFF" long enough to assure the 36VLR supply voltage has fully discharged. Once 36VLR is discharged, the DERM will again check the failure conditions upon key "ON". If the failure conditions are not present (no failure indicated) then, and only then, will current Code 34 be cleared.

Description:

At "Turn-ON" the DERM monitors the voltage at the "Sense Low" input terminal "A6" for 500 milliseconds. The DERM expects the voltage to be between 28% and 59% of Ignition 1 voltage before the 36VLR output is charged. If Ignition 1 circuit from the Run Fuse to the Arming Sensor is open or the Ignition 1 diode in the Arming Sensor is open the voltage at the "Sense Low" input terminal "A6" will be less than 4.6 volts and Code 34 will set.

CAUTION: To avoid deployment when troubleshooting the SIR system, use Digital Volt Ohm Meter (DVOM) T000T1034. DO NOT USE any type of electrical equipment other than those specified in this manual. Never use a non-powered probe type tester. Instructions in this manual must be followed carefully, otherwise personal injury may result.

CODE 34

(PAGE 3 OF 3)

OPEN IN IGNITION 1 FEED TO DEPLOYMENT LOOP

WERE YOU SENT HERE FROM CODE 34 (PAGE 2 OF 3)?

YES

- IGNITION SWITCH "ON".
- CHECK VOLTAGE FROM ARMING SENSOR HARNESS CONNECTOR TERMINAL "C" TO GROUND.

NO

- RETURN TO CODE 34 (PAGE 2 OF 3).

NO VOLTAGE

- DISCONNECT FORWARD DISCRIMINATING AND PASSENGER COMP. SENSORS.
- CHECK RESISTANCE OF FORWARD DISCRIM. SENSOR BETWEEN TERMINALS "A" AND "B".
- CHECK RESISTANCE OF PASSENGER COMP. SENSOR BETWEEN TERMINALS "E" AND "F".
- RESISTANCE SHOULD BE BETWEEN 8.37 AND 8.54KΩ AT BOTH SENSORS. IS IT?

YES

- REPAIR SHORT TO GROUND IN CKT 23G.
- REFER TO WIRE REPAIR INSTRUCTIONS IN SECTION WB.1-J.
- RECONNECT ALL SIR SYSTEM COMPONENTS, CLEAR CODES.
- KEY "OFF" FOR 10 MINUTES.
- REPEAT "SIR DIAGNOSTICS SYSTEM CHECK".

NO

- REPLACE SENSOR WHICH HAD FAULTY RESISTANCE VALUE.
- RECONNECT ALL SIR SYSTEM COMPONENTS, CLEAR CODES.
- KEY "OFF" FOR 10 MINUTES.
- REPEAT "SIR DIAGNOSTIC SYSTEM CHECK".

IGNITION VOLTAGE

- REPAIR SHORT TO VOLTAGE IN CKT 22W.
- RECONNECT ALL SIR SYSTEM COMPONENTS, CLEAR CODES.
- KEY "OFF" FOR 10 MINUTES.
- REPEAT "SIR DIAGNOSTC SYSTEM CHECK".

WERE YOU SENT HERE FROM CODE 34 (PAGE 1 OF 3)?

YES

- IGNITION "OFF"
- DISCONNECT DERM, RESISTOR MODULE, SIR LOAD T000T1035 AND ARMING SENSOR.
- CHECK FOR CONTINUITY BETWEEN TERMINAL "A2" OF THE DERM HARNESS CONNECTOR AND THE FOLLOWING TERMINALS OF THE RESISTOR MODULE HARNESS CONNECTOR.
  - "6" (CKT 4BY)
  - "8" (CKT 2BO)
  - "9" (CKT 1BU)
  - "10"(CKT 19S)
  - "5" (CKT 22W)

NO

- RETURN TO CODE 34 (PAGE 1 OF 3).

CONTINUITY

- REPAIR SHORT OF 36 VLR CKT 5YB TO CKT WHICH HAD CONTINUITY.
- REFER TO WIRE REPAIR INSTRUCTIONS IN SECTION WB.1-J.
- RECONNECT ALL SIR SYSTEM COMPONENTS, CLEAR CODES.
- KEY "OFF" FOR 10 MINUTES.
- REPEAT "SIR DIAGNOSTICS SYSTEM CHECK".

NO CONTINUITY

- REPLACE DERM, REFER TO SECTION WB.3-E.
- RECONNECT ALL SIR SYSTEM COMPONENTS, CLEAR CODES.
- KEY "OFF" FOR 10 MINUTES.
- REPEAT "SIR DIAGNOSTICS SYSTEM CHECK".

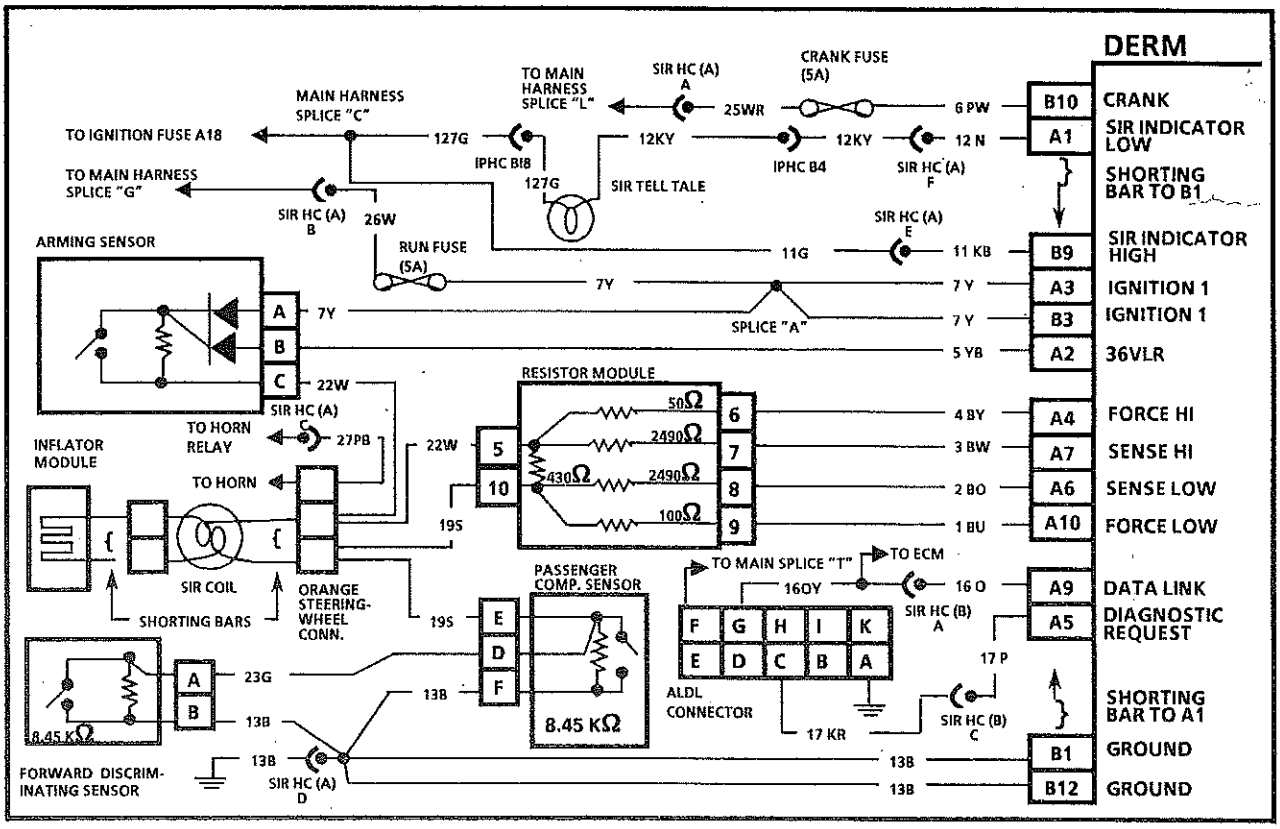

CODE 35

DISCRIMINATING SENSOR OPEN

Test Conditions:

Tested every 100 milliseconds during "Continuous Monitoring".

Failure Conditions:

Code 35 will set if the voltage at the "Sense Low" input terminal "A6" is between 61% and 78% of 36VLR output voltage for 500 milliseconds.

Conditions To Clear:

Current Code 35 will clear if the voltage at the "Sense Low" input terminal "A6" is between 41% and 61% of 36VLR output voltage for 500 milliseconds.

Description:

Code 35 is set when the voltage at the "Sense Low" input terminal "A6" is between 61% and 78% of 36VLR output voltage for 500 milliseconds during the "Continuous Monitoring" tests performed by the DERM. The "Continuous Monitoring" tests are performed by the DERM after the initial "Turn-ON" tests are completed and are performed every 100 milliseconds while Ignition 1 voltage is present at the DERM. If one of the Discriminating Sensors is open the voltage at the "Sense Low" input will increase due to the increase in the resistance of the Discriminating Sensor section of the deployment loop and Code 35 will set.

Notes on Fault Tree:

1) Checks the resistance of the Forward Discriminating Sensor.

CAUTION: To avoid deployment when troubleshooting the SIR system, use Digital Volt Ohm Meter (DVOM) T000T1034. DO NOT USE any type of electrical equipment other than those specified in this manual. Never use a non-powered probe type tester. Instructions in this manual must be followed carefully, otherwise personal injury may result.

CODE 35
DISCRIMINATING SENSOR OPEN

WAS THE "SIR DIAGNOSTIC SYSTEM CHECK" PERFORMED?

YES

- IGNITION "OFF".
- DISCONNECT 6-WAY SIR HARNESS CONNECTOR (SIR HC (A)).
- DISCONNECT ORANGE 3-WAY STEERING WHEEL CONNECTOR.
- CONNECT SIR LOAD T000T1035 TO THE SIR HARNESS SIDE (CAR SIDE) OF THE ORANGE 3-WAY STEERING WHEEL CONNECTOR.
- RECONNECT 6-WAY SIR HARNESS CONNECTOR (SIR HC (A)).

NO

- RETURN TO THE "SIR DIAGNOSTIC SYSTEM CHECK."

ARE BOTH CODES 35 AND 26 SET?

YES

- IGNITION "OFF"
- DISCONNECT DERM AND RESISTOR MODULE.
- CHECK FOR CONTINUITY BETWEEN TERMINALS "A2" AND "A7" OF DERM HARNESS CONNECTOR.

CONTINUITY

- REPAIR SHORT FROM 36VLR CKT 5YB TO CKT 3BW.
- RECONNECT ALL SIR SYSTEM COMPONENTS, CLEAR SIR CODES
- REPEAT "SIR DIAGNOSTIC SYSTEM CHECK".

NO CONTINUITY

- REPLACE DERM
- RECONNECT ALL SIR SYSTEM COMPONENTS, CLEAR SIR CODES
- REPEAT "SIR DIAGNOSTIC SYSTEM CHECK".

NO

(1)

- IGNITION SWITCH "OFF".
- DISCONNECT PASSENGER COMPARTMENT SENSOR.
- MEASURE RESISTANCE ON PASSENGER COMPARTMENT SENSOR CONNECTOR FROM TERMINAL "D" TO GROUND.

8.54 KOHMS OR MORE

- DISCONNECT THE FORWARD DISCRIMINATING SENSOR.
- MEASURE RESISTANCE FROM TERMINAL "A" TO "B" OF THE FORWARD DISCRIMINATING SENSOR.

LESS THAN 8.54 KOHMS

- CHECK CONTINUITY FROM PASS. COMP. SENSOR HARNESS CONNECTOR TERMINAL "F" TO GROUND.

NO CONTINUITY

- REPAIR OPEN IN CKT 13B BETWEEN PASSENGER COMPARTMENT SENSOR AND GROUND.
- REFER TO WIRE REPAIR INSTRUCTIONS IN SECTION WB.1-J.
- RECONNECT ALL SIR SYSTEM COMPONENTS, CLEAR SIR CODES.
- REPEAT "SIR DIAGNOSTIC SYSTEM CHECK".

CONTINUITY

- REPLACE PASSENGER COMP. SENSOR, REFER TO SECTION WB.3-G.
- RECONNECT ALL SIR SYSTEM COMPONENTS, CLEAR SIR CODES.
- REPEAT "SIR DIAGNOSTIC SYSTEM CHECK."

LESS THAN 8.54 KOHMS

- CHECK CONTINUITY TO GROUND FROM FORWARD DISCRIMINATING SENSOR HARNESS CONNECTOR TERMINAL "B."

8.54 KOHMS OR MORE

- REPLACE FORWARD DISCRIMINATING SENSOR, REFER TO SECTION WB.3-H.
- RECONNECT ALL SIR SYSTEM COMPONENTS, CLEAR SIR CODES.
- REPEAT "SIR DIAGNOSTIC SYSTEM CHECK.

NO CONTINUITY

- REPAIR OPEN IN CKT 13B BETWEEN FORWARD DISCRIMINATING SENSOR AND GROUND.
- REFER TO WIRE REPAIR INSTRUCTIONS IN SECTION WB.1-J
- RECONNECT ALL SIR SYSTEM COMPONENTS, CLEAR SIR CODES.
- REPEAT "SIR DIAGNOSTIC SYSTEM CHECK."

CONTINUITY

- REPAIR OPEN IN CKT 23G BETWEEN FORWARD DISCRIMINATING SENSOR AND PASSENGER COMPARTMENT SENSOR
- REFER TO WIRE REPAIR INSTRUCTIONS IN SECTION WB.1-J.
- RECONNECT ALL SIR SYSTEM COMPONENTS, CLEAR SIR CODES.
- REPEAT "SIR DIAGNOSTIC SYSTEM CHECK."

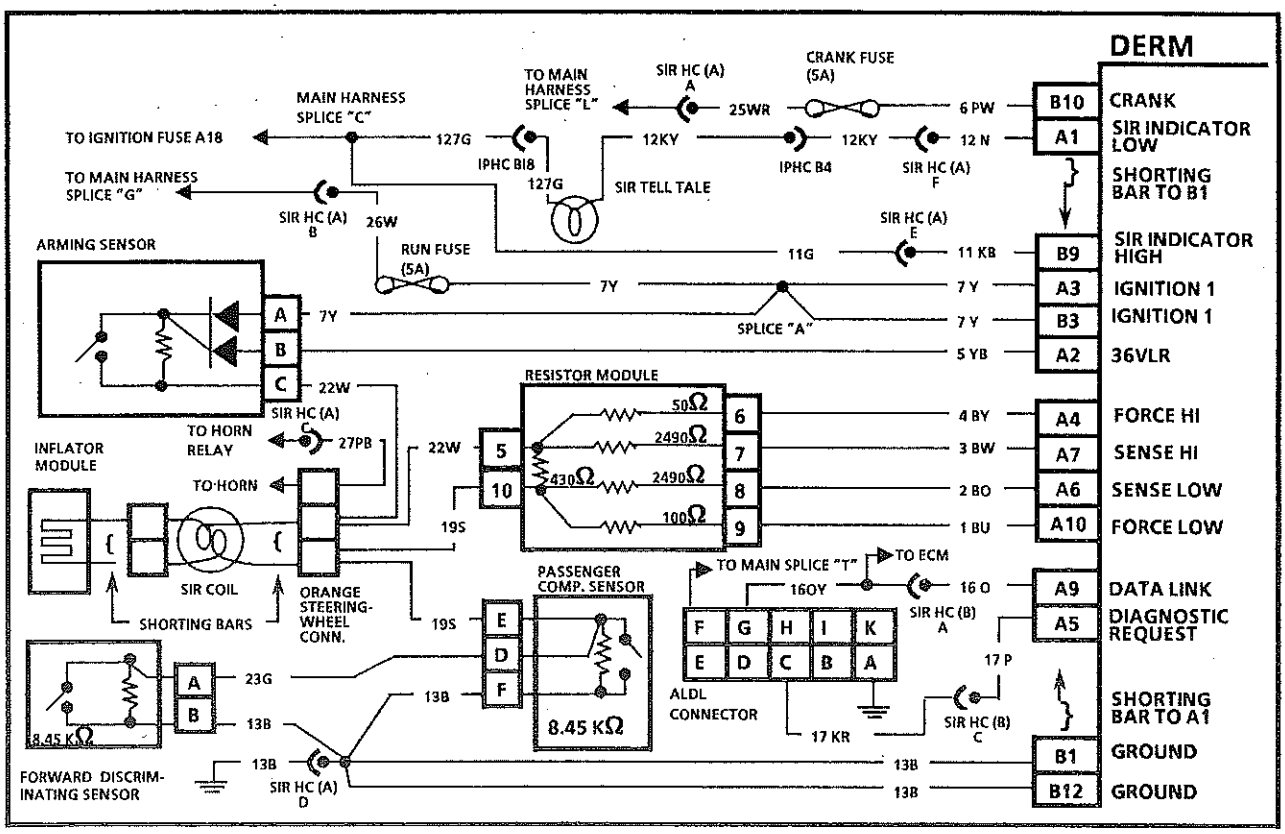

CODE 41

ENERGY RESERVE VOLTAGE CHARGING FAILURE

Test Conditions:

Tested once during each ignition cycle at "Turn-ON".

Failure Conditions:

Code 41 will set if the the 36VLR output of the DERM has not reached at least 28.4 volts within 7 seconds after Ignition 1 voltage is applied to the DERM.

Conditions To Clear:

Current Code 41 will be cleared each time the Ignition Switch is turned "OFF."

Description:

The DERM measures the deployment loop energy reserve voltage (36VLR) and checks that it has reached at least 28.4 volts within 7 seconds after Ignition 1 voltage is applied to the DERM. Code 41 indicates an internal fault in the DERM or a resistive short to ground in the 36VLR circuit to the Arming Sensor.

Notes on Fault Tree:

1) Checks for a resistive short to ground in the 36VLR circuit between the DERM and the Arming Sensor.
2) Checks for a short to system voltage on 36VLR circuit.
3) Checks for a resistive short to ground within the Arming Sensor.

CAUTION: To avoid deployment when troubleshooting the SIR system, use Digital Volt Ohm Meter (DVOM) T000T1034. DO NOT USE any type of electrical equipment other than those specified in this manual. Never use a non-powered probe type tester. Instructions in this manual must be followed carefully, otherwise personal injury may result.

CODE 41

ENERGY RESERVE VOLTAGE CHARGING FAILURE

WAS THE "SIR DIAGNOSTIC SYSTEM CHECK" PERFORMED?

YES

- IGNITION "OFF".
- DISCONNECT 6-WAY SIR HARNESS CONNECTOR (SIR HC (A)).
- DISCONNECT ORANGE 3-WAY STEERING WHEEL CONNECTOR.
- CONNECT SIR LOAD T000T1035 TO THE SIR HARNESS SIDE (CAR SIDE) OF THE ORANGE 3-WAY STEERING WHEEL CONNECTOR.
- RECONNECT 6-WAY SIR HARNESS CONNECTOR (SIR HC (A)).

NO

- RETURN TO THE "SIR DIAGNOSTIC SYSTEM CHECK."

(1)

- DISCONNECT DERM.
- DISCONNECT ARMING SENSOR.
- CHECK CONTINUITY FROM TERMINAL "A2" OF DERM HARNESS CONNECTOR TO GROUND.

NO CONTINUITY

(2)

- IGNITION SWITCH "ON."
- MEASURE VOLTAGE FROM TERMINAL "A2" OF DERM HARNESS CONNECTOR TO GROUND.

CONTINUITY

- REPAIR SHORT TO GROUND BETWEEN DERM AND ARMING SENSOR ON 36VLR CKT 5YB.
- REFER TO WIRE REPAIR INSTRUCTIONS IN SECTION WB.1-J.
- RECONNECT ALL SIR SYSTEM COMPONENTS, CLEAR SIR CODES.
- REPEAT "SIR DIAGNOSTIC SYSTEM CHECK."

NO VOLTAGE

(3)

- RECONNECT ARMING SENSOR
- DISCONNECT ORANGE 3-WAY STEERING WHEEL CONNECTOR AND RESISTOR MODULE
- CHECK CONTINUITY FROM DERM HARNESS CONNECTOR TERMINAL "A2" TO GROUND.

VOLTAGE

- REPAIR SHORT FROM CKT 5YB TO IGNITION VOLTAGE.
- REFER TO WIRE REPAIR INSTRUCTIONS IN SECTION WB.1-J.
- RECONNECT ALL SIR SYSTEM COMPONENTS, CLEAR SIR CODES.
- REPEAT "SIR DIAGNOSTIC SYSTEM CHECK."

NO CONTINUITY

- CHECK FOR CONTINUITY FROM DERM HARNESS TERMINAL "A2" TO "A3".

CONTINUITY

- REPLACE ARMING SENSOR, REFER TO SETION WB.3-F.
- RECONNECT ALL SIR SYSTEM COMPONENTS, CLEAR SIR CODES.
- REPEAT "SIR DIAGNOSTIC SYSTEM CHECK."

NO CONTINUITY

- DISCONNECT ARMING SENSOR.
- RECONNECT DERM.
- IGNITION SWITCH "ON."
- MEASURE VOLTAGE FROM ARMING SENSOR HARNESS CONNECTOR TERMINAL "B" TO GROUND.

CONTINUITY

- REPLACE ARMING SENSOR, REFER TO SECTION WB.3-F.
- RECONNECT ALL SIR SYSTEM COMPONENTS, CLEAR SIR CODES.
- REPEAT "SIR DIAGNOSTIC SYSTEM CHECK."

LESS THAN 30 VOLTS

- REPLACE DERM, REFER TO SECTION WB.3-F.
- RECONNECT ALL SIR SYSTEM COMPONENTS.
- REPEAT "SIR DIAGNOSTIC SYSTEM CHECK."

30 VOLTS OR MORE

- REPLACE ARMING SENSOR, REFER TO SECTION WB.3-F.
- RECONNECT ALL SIR SYSTEM COMPONENTS, CLEAR SIR CODES.
- REPEAT "SIR DIAGNOSTIC SYSTEM CHECK."

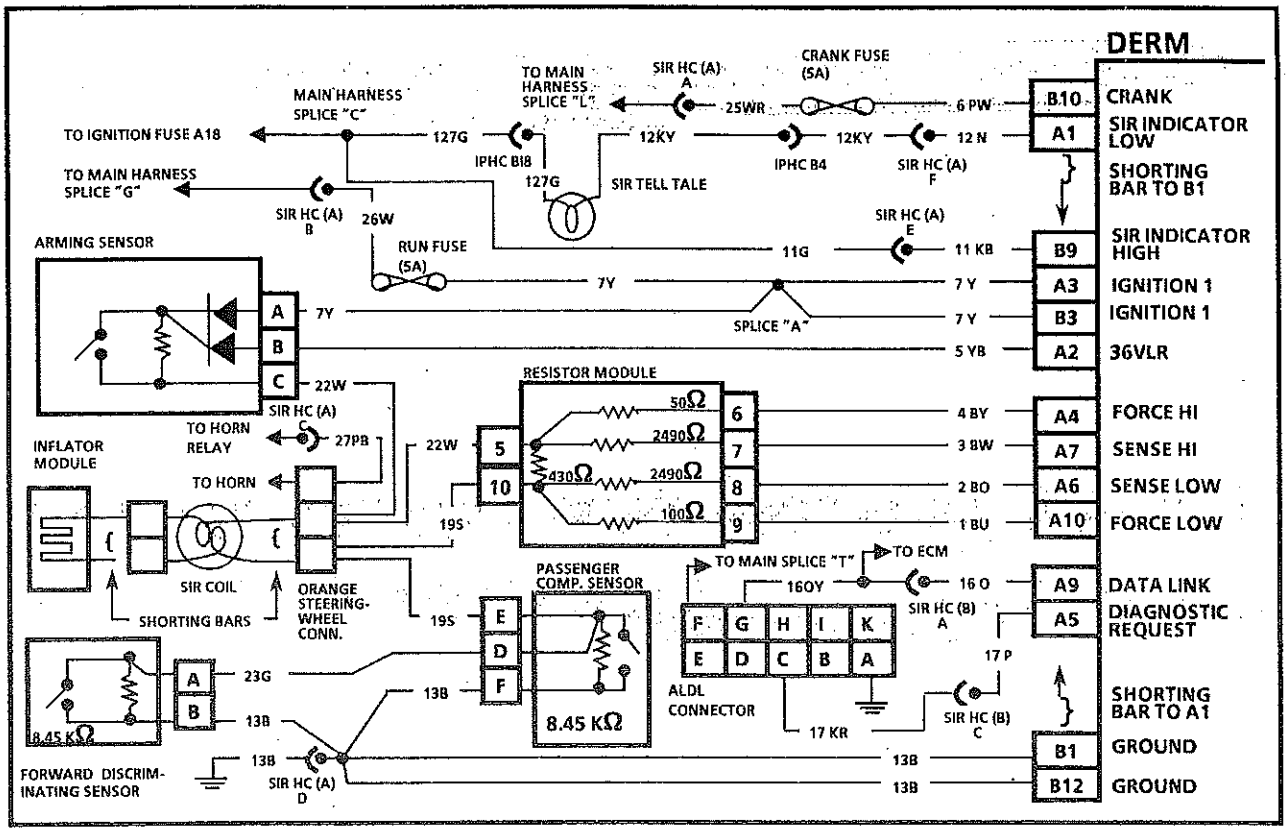

CODE 42

ENERGY RESERVE VOLTAGE TOO LOW

Test Conditions:

Tested every 100 milliseconds during "Continuous Monitoring".

Failure Conditions:

Code 42 will set if the deployment loop energy reserve voltage (36VLR) is less than 28.4 volts for 500 milliseconds.

Conditions To Clear:

Code 42 will clear if the deployment energy reserve voltage (36VLR) is greater than 28.4 volts for 500 milliseconds after Code 42 has set.

Description:

The DERM measures the deployment loop energy reserve voltage (36VLR) and checks that it remains above 28.4 volts at all times after the initial charging of the reserve is completed (see Code 41). Code 42 indicates an internal fault in the DERM or a resistive short to ground in the 36VLR circuit to the Arming Sensor.

Notes on Fault Tree:

1) Checks for a resistive short to ground in the 36VLR circuit between the DERM and the Arming Sensor.
2) Checks for a short to system voltage on 36VLR circuit.

CAUTION: To avoid deployment when troubleshooting the SIR system, use Digital Volt Ohm Meter (DVOM) T000T1034. DO NOT USE any type of electrical equipment other than those specified in this manual. Never use a non-powered probe type tester. Instructions in this manual must be followed carefully, otherwise personal injury may result.

CODE 42

ENERGY RESERVE VOLTAGE TOO LOW

WAS THE "SIR DIAGNOSTIC SYSTEM CHECK" PERFORMED?

YES

- IGNITION "OFF".
- DISCONNECT 6-WAY SIR HARNESS CONNECTOR (SIR HC (A)).
- DISCONNECT ORANGE 3-WAY STEERING WHEEL CONNECTOR.
- CONNECT SIR LOAD T000T1035 TO THE SIR HARNESS SIDE (CAR SIDE) OF THE ORANGE 3-WAY STEERING WHEEL CONNECTOR.
- RECONNECT 6-WAY SIR HARNESS CONNECTOR (SIR HC (A)).

NO

- RETURN TO THE "SIR DIAGNOSTIC SYSTEM CHECK."

(1)

- DISCONNECT DERM.
- DISCONNECT ARMING SENSOR.
- CHECK FOR CONTINUITY FROM TERMINAL "A2 "OF DERM HARNESS CONNECTOR TO GROUND.

NO CONTINUITY

(2)

- IGNITION SWITCH "ON."
- MEASURE VOLTAGE FROM TERMINAL "A2" OF DERM HARNESS CONNECTOR TO GROUND.

CONTINUITY

- REPAIR SHORT TO GROUND BETWEEN DERM AND ARMING SENSOR ON 36VLR CKT 5YB.
- REFER TO WIRE REPAIR INSTRUCTIONS IN SECTION WB.1-J.
- RECONNECT ALL SIR SYSTEM COMPONENTS, CLEAR SIR CODES.
- REPEAT "SIR DIAGNOSTIC SYSTEM CHECK."

NO VOLTAGE

- ARMING SENSOR STILL DISCONNECTED.
- RECONNECT DERM.
- IGNITION SWITCH "ON."
- MEASURE VOLTAGE FROM ARMING SENSOR HARNESS CONNECTOR TERMINAL "B" TO GROUND.

VOLTAGE

- REPAIR SHORT FROM CKT 5YB TO VOLTAGE.
- REFER TO WIRE REPAIR INSTRUCTIONS IN SECTION WB.1-J.
- RECONNECT ALL SIR SYSTEM COMPONENTS, CLEAR SIR CODES.
- REPEAT "SIR DIAGNOSTIC SYSTEM CHECK."

LESS THAN 30 VOLTS

- REPLACE DERM, REFER TO SECTION WB.3-E.
- RECONNECT ALL SIR SYSTEM COMPONENTS.
- REPEAT "SIR DIAGNOSTIC SYSTEM CHECK."

30 VOLTS OR MORE

- REPLACE ARMING SENSOR, REFER TO SECTION WB.3-F.
- RECONNECT ALL SIR SYSTEM COMPONENTS, CLEAR SIR CODES.
- REPEAT "SIR DIAGNOSTIC SYSTEM CHECK."

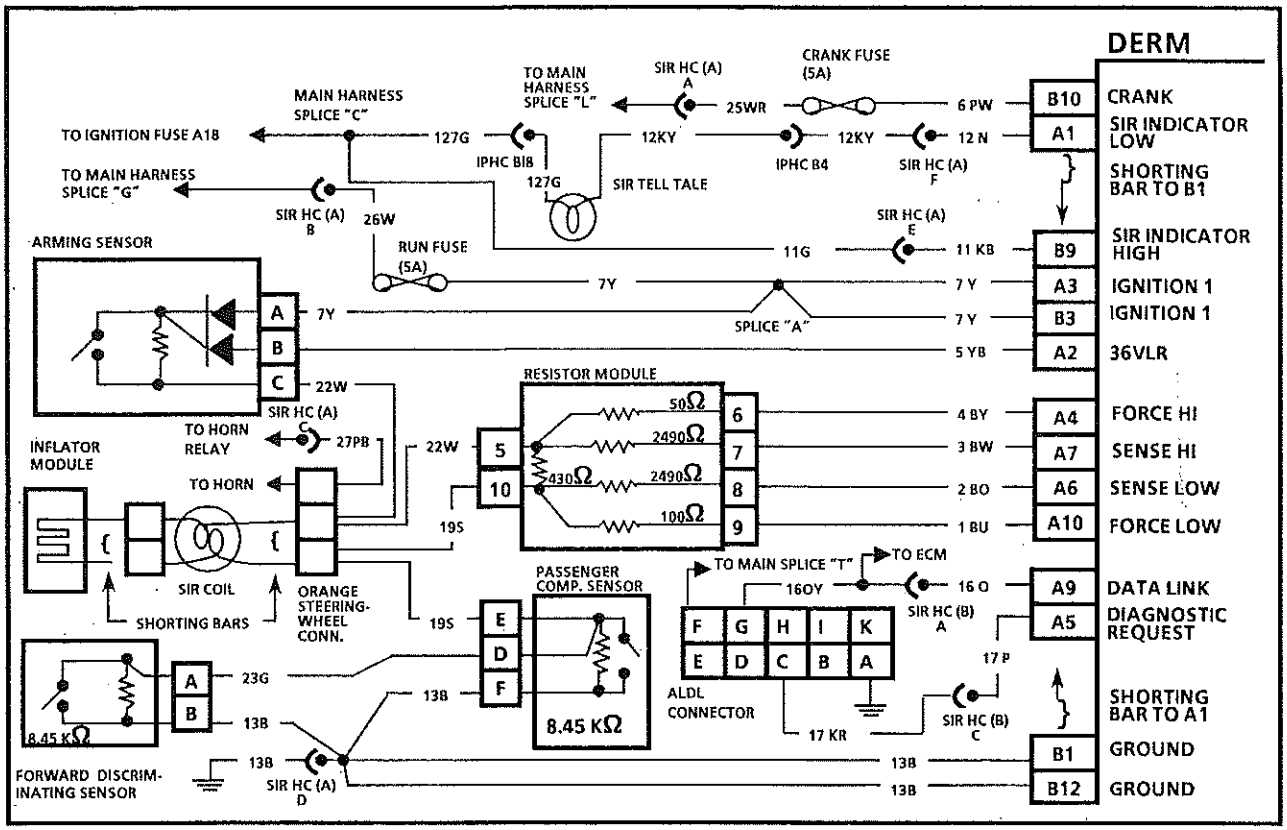

CODE 51

ACCIDENT DETECTED

Test Conditions:

DERM energy reserve voltage OK.

Failure Conditions:

Current Code 51 will set if the DERM senses that both the Arming Sensor and at least one of the Discriminating Sensors are closed simultaneously.

Conditions To Clear:

Current Code 51 can be cleared using a Tech 1 clear codes command. History Code 51 will remain in the DERM thereafter.

Description:

The DERM determines that the Arming Sensor is closed when system voltage or more is present at the "Sense Hi" input, and it determines that a Discriminating Sensor is closed when it notes low voltage at the "Sense Low" input. There are some faults that may "look" like an accident to the DERM, and therefore record a Code 51. History Code 51 therefore is not proof that the vehicle was in an accident.

Notes on Fault Tree:

1) Incorrect diagnosis will occur if the SIR Diagnostic System Check is not performed.
2) If a Code 51 is current without signs of frontal impact and no deployment, then the code has set falsely and the DERM is suspect.
3) History Code 51 cannot be cleared because the event of both the arming sensor and discriminating sensor being closed simultaneously is permanently stored in the EEPROM of the DERM.
4) Lotus Cars, USA must be notified of a Code 51 stored. DO NOT replace DERM without authorization from Lotus Cars, USA.

CAUTION: To avoid deployment when troubleshooting the SIR system, use Digital Volt Ohm Meter (DVOM) T000T1034. DO NOT USE any type of electrical equipment other than those specified in this manual. Never use a non-powered probe type tester. Instructions in this manual must be followed carefully, otherwise personal injury may result.

CODE 51

ACCIDENT DETECTED

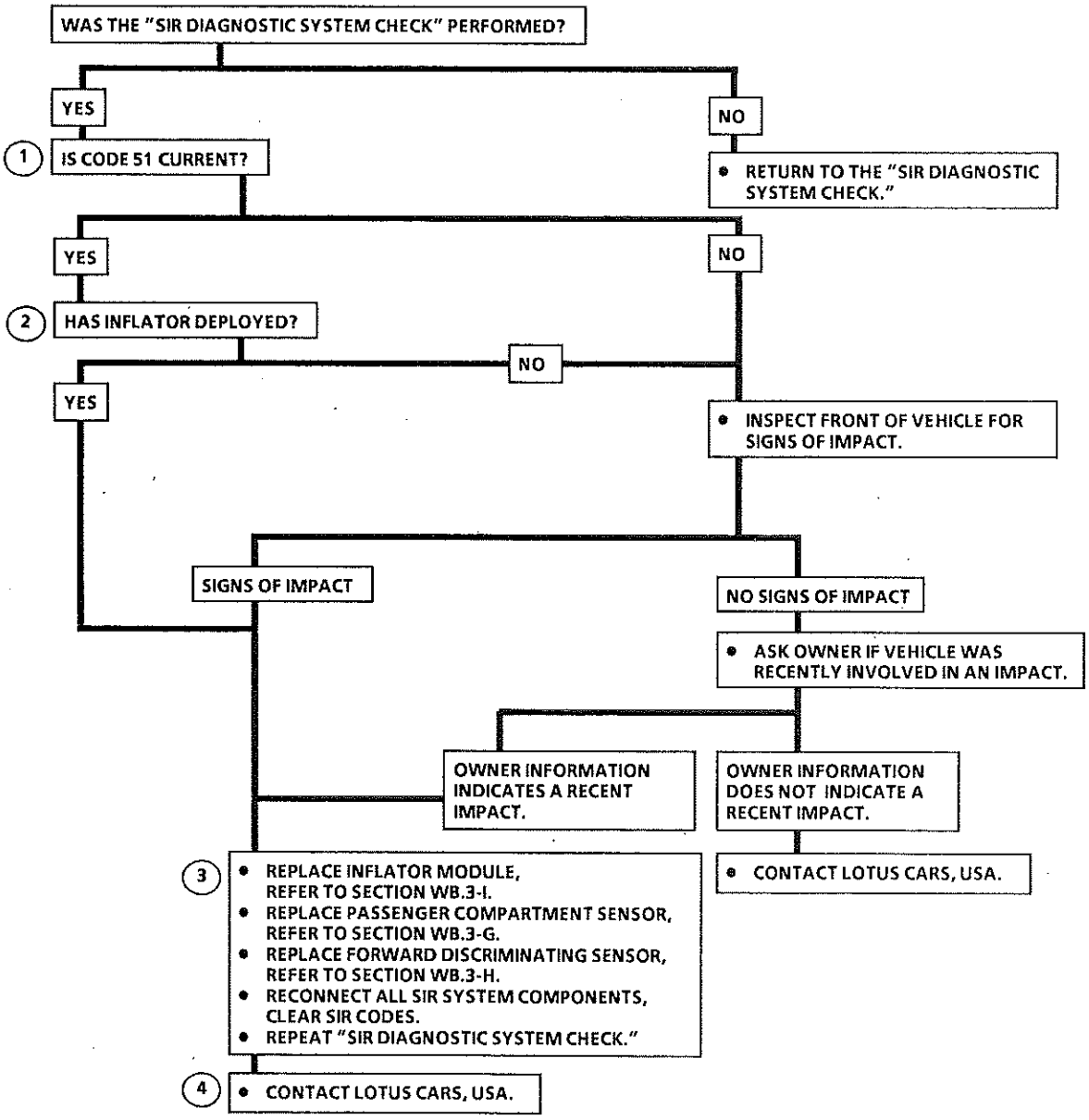

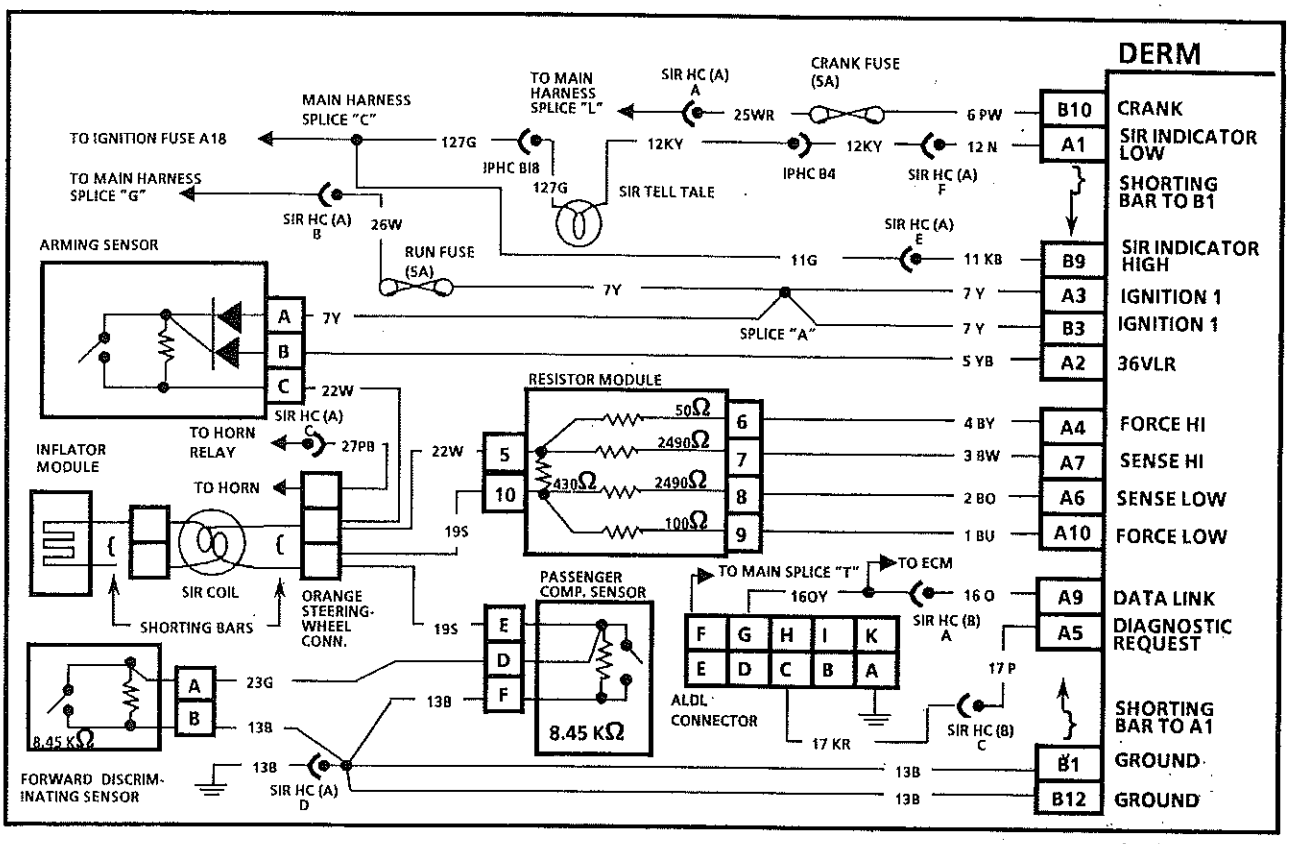

CODE 52

EEPROM ACCIDENT DATA AREA FULL

Test Conditions:

Tested every 100 milliseconds during "Continuous Monitoring".

Failure Conditions:

Code 52 will set when the EEPROM area reserved for accident data in the DERM is detected to be full during "Continuous Monitoring" for 100 milliseconds.

Conditions To Clear:

This code cannot be cleared. SIR tell tale is turned "ON" during all future Ignition cycles.

Description:

When there is a vehicle accident of sufficient magnitude to set Code 51, the DERM stores accident information in the EEPROM. Code 52 is set when the EEPROM has stored 4 simultaneously closed Arming and Discriminating Sensor events (Code 51 settings).

Notes on Fault Tree:

1) Lotus Cars, USA must be informed of a Code 52 stored. DO NOT replace DERM without authorization from Lotus Cars, USA.

CAUTION: To avoid deployment when troubleshooting the SIR system, use Digital Volt Ohm Meter (DVOM) T000T1034. DO NOT USE any type of electrical equipment other than those specified in this manual. Never use a non-powered probe type tester. Instructions in this manual must be followed carefully, otherwise personal injury may result.

CODE 52

EEPROM ACCIDENT DATA AREA FULL

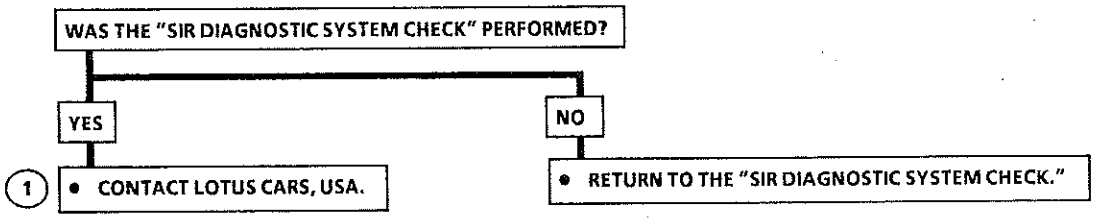

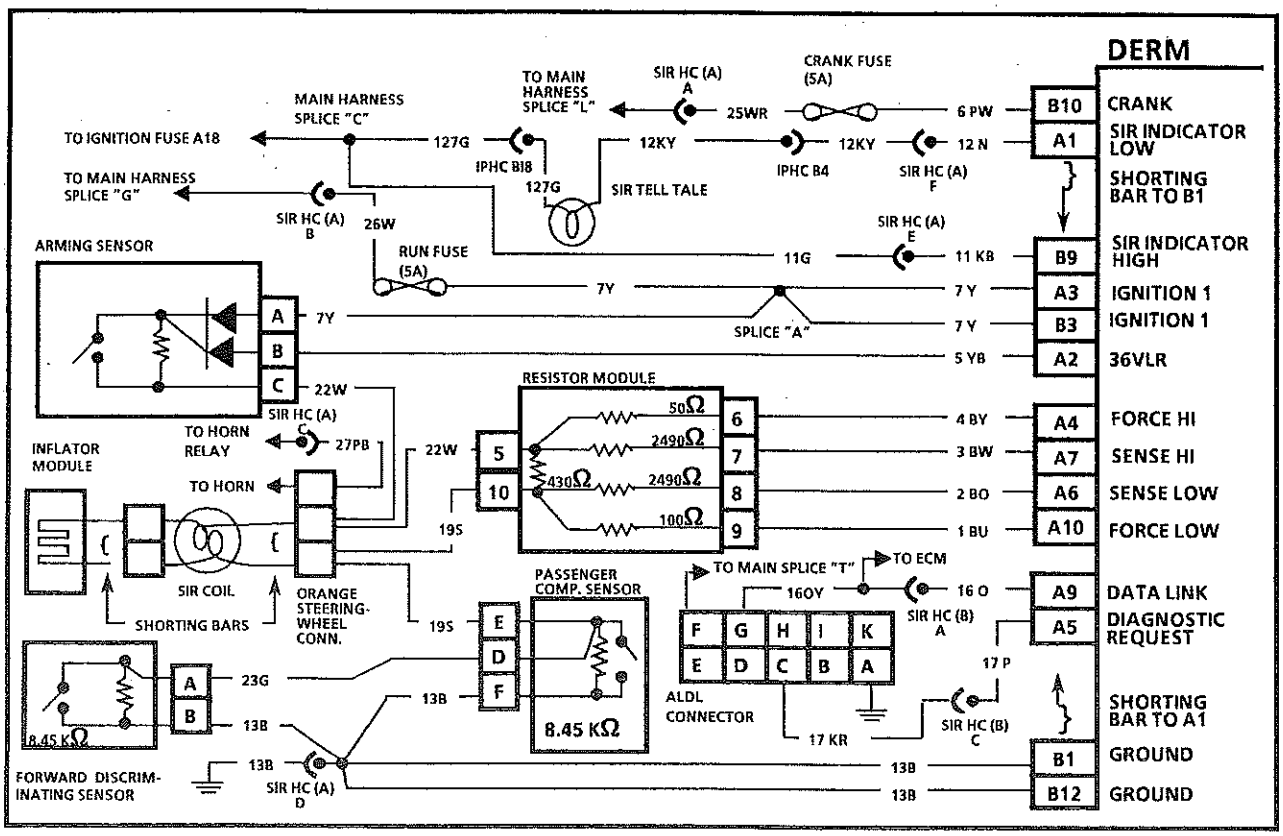

CODE 61

FORCE LOW OR SIR TELL TALE CIRCUIT FAILURE

Test Conditions:

Tested every 100 milliseconds during "Continuous Monitoring".

Failure Conditions:

Code 61 will set if: 1) Voltage at "Sense Low" input is greater than 8 volts; 2) Feedback from ground driver (QDM) does not agree with the commanded state for 500 milliseconds.

Conditions To Clear:

Current Code 61 will be cleared each time the Ignition Switch is turned "OFF."

Description:

The DERM monitors the ground driver output by comparing the output state to the processor commanded state. Code 61 will set when the commanded state does not match the output state of the ground driver. A possible cause for a Code 61 is a problem in the "Force Low" CKT.

Notes on Fault Tree:

1) Checks for an open 100 ohm resistor in the Resistor Module.
2) Checks for an open between the Resistor Module and the DERM on the "Force Low" circuit.

CAUTION: To avoid deployment when troubleshooting the SIR system, use Digital Volt Ohm Meter (DVOM) T000T1034. DO NOT USE any type of electrical equipment other than those specified in this manual. Never use a non-powered probe type tester. Instructions in this manual must be followed carefully, otherwise personal injury may result.

CODE 61

FORCE LOW OR SIR TELL TALE INDICATOR CIRCUIT FAILURE

WAS THE "SIR DIAGNOSTIC SYSTEM CHECK" PERFORMED?

NO

- RETURN TO THE "SIR DIAGNOSTIC SYSTEM CHECK."

YES

- IGNITION "OFF".
- DISCONNECT 6-WAY SIR HARNESS CONNECTOR (SIR HC (A)).
- DISCONNECT ORANGE 3-WAY STEERING WHEEL CONNECTOR.
- CONNECT SIR LOAD T000T1035 TO THE SIR HARNESS SIDE (CAR SIDE) OF THE ORANGE 3-WAY STEERING WHEEL CONNECTOR.
- RECONNECT 6-WAY SIR HARNESS CONNECTOR (SIR HC (A)).

(1)

- DISCONNECT RESISTOR MODULE.
- MEASURE RESISTANCE OF RESISTOR MODULE FROM TERMINAL "9" TO "10."

NOT 95 TO 105 OHMS

- REPLACE RESISTOR MODULE, REFER TO SECTION WB.3-D.
- RECONNECT ALL SIR SYSTEM COMPONENTS, CLEAR SIR CODES.
- REPEAT "SIR DIAGNOSTIC SYSTEM CHECK."

95 TO 105 OHMS

(2)

- IGNITION SWITCH "OFF."
- DISCONNECT DERM.
- MEASURE RESISTANCE FROM RESISTOR MODULE HARNESS CONNECTOR TERMINAL "9" TO DERM HARNESS CONNECTOR TERMINAL "A10."

OVER 1 OHM

- REPAIR OPEN OR HIGH RESISTANCE IN CKT 1BU.
- REFER TO WIRE REPAIR INSTRUCTIONS IN SECTION WB.1-J.
- RECONNECT ALL SIR SYSTEM COMPONENTS, CLEAR SIR CODES.
- REPEAT "SIR DIAGNOSTIC SYSTEM CHECK."

1 OHM OR LESS

- CHECK FOR TERMINAL CONTACT INTEGRITY AT DERM TERMINAL "A10" AND AT RESISTOR MODULE TERMINAL "9."

GOOD TERMINAL CONTACT

- REMOVE SIR TELL TALE BULB.
- CHECK CKT 12KY/12N FOR OPEN, SHORT TO GROUND AND VOLTAGE:
  - CHECK FOR CONTINUITY BETWEEN TERMINAL "A1" OF DERM HARNESS CONNECTOR AND SIR TELL TALE CKT 12KY TERMINAL.
    REQUIREMENT: CONTINUITY
  - CHECK FOR CONTINUITY BETWEEN TERMINAL "A1" OF DERM HARNESS CONNECTOR AND GROUND.
    REQUIREMENT: NO CONTINUITY
  - MEASURE VOLTAGE AT TERMINAL "A1" OF DERM HARNESS CONNECTOR.
    REQUIREMENT: NO VOLTAGE

POOR TERMINAL CONTACT

- REPAIR CONDITION AS NEEDED.
- IF TERMINAL REPAIR IS NEEDED, REFER TO WIRE REPAIR INSTRUCTIONS IN SECTION WB.1-J.
- RECONNECT ALL SIR SYSTEM COMPONENTS, CLEAR SIR CODES.
- REPEAT "SIR DIAGNOSTIC SYSTEM CHECK."

CKT NOT OK

- REPAIR CKT 12KY/12N, REFER TO SECTION WB.1-J.
- RECONNECT ALL SIR SYSTEM COMPONENTS.
- CLEAR SIR CODES.
- REPEAT "SIR DIAGNOSTIC SYSTEM CHECK."

CKT OK

- REPLACE DERM, REFER TO SECTION WB.3-E.
- RECONNECT ALL SIR SYSTEM COMPONENTS
- REPEAT "SIR DIAGNOSTIC SYSTEM CHECK."

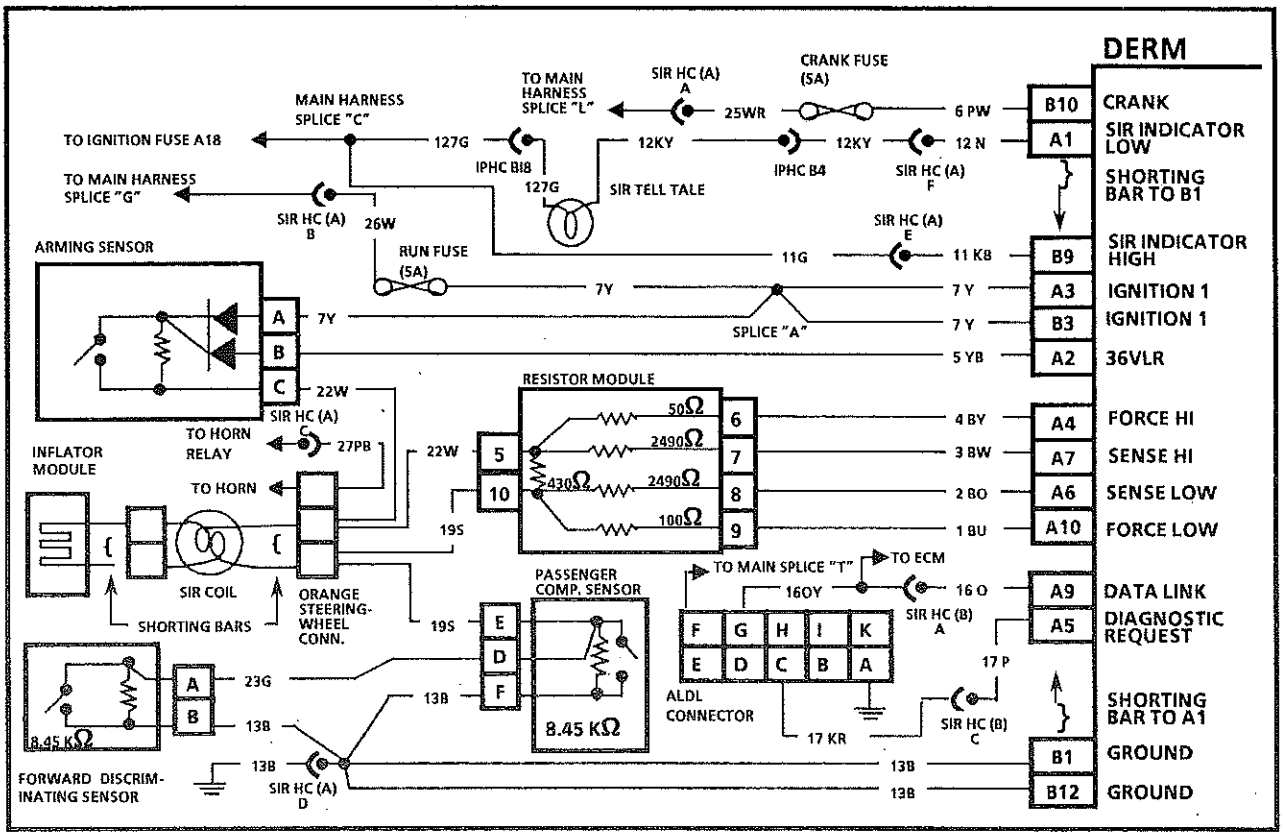

CODE 71

INTERNAL DERM FAULT

Test Conditions:

Tested during "Turn-ON" and every 100 milliseconds during "Continuous Monitoring".

Failure Conditions:

Code 71 is set when an internal DERM fault is detected during "Turn-ON" or "Continuous Monitoring".

Conditions To Clear:

Current Code 71 will clear if no internal DERM faults are detected for 500 milliseconds.

Description:

Code 71 is an internal DERM fault and will set if any of the following conditions are detected: 1) DERM power supply reserve voltage charge or discharge time failure; 2) DERM power supply reserve voltage less than 13.0 volts or greater than 19.6 volts for 500 milliseconds; 3) DERM is unable to read from or write to EEPROM; 4) 36VLR is greater than 44.0 volts for 500 milliseconds.

CAUTION: To avoid deployment when troubleshooting the SIR system, use Digital Volt Ohm Meter (DVOM) T000T1034. DO NOT USE any type of electrical equipment other than those specified in this manual. Never use a non-powered probe type tester. Instructions in this manual must be followed carefully, otherwise personal injury may result.

CODE 71

INTERNAL DERM FAULT

WAS THE "SIR DIAGNOSTIC SYSTEM CHECK" PERFORMED?

YES

- IGNITION "OFF".
- DISCONNECT 6-WAY SIR HARNESS CONNECTOR (SIR HC (A)).
- DISCONNECT ORANGE 3-WAY STEERING WHEEL CONNECTOR.
- CONNECT SIR LOAD T000T1035 TO THE SIR HARNESS SIDE (CAR SIDE) OF THE ORANGE 3-WAY STEERING WHEEL CONNECTOR.
- RECONNECT 6-WAY SIR HARNESS CONNECTOR (SIR HC (A)).
- REPLACE DERM, REFER TO SECTION WB.3-E.
- RECONNECT ALL SIR SYSTEM COMPONENTS.
- REPEAT "SIR DIAGNOSTIC SYSTEM CHECK".

NO

- RETURN TO THE "SIR DIAGNOSTIC SYSTEM CHECK."